M^3 – **M**icrokernel-based Syste**m** for Heterogeneous **M**anycores

Nils Asmussen

MKC, 06/29/2017

Outline

Outline

Motivation

Intel Knights Landing

Motivation

Intel Knights Landing

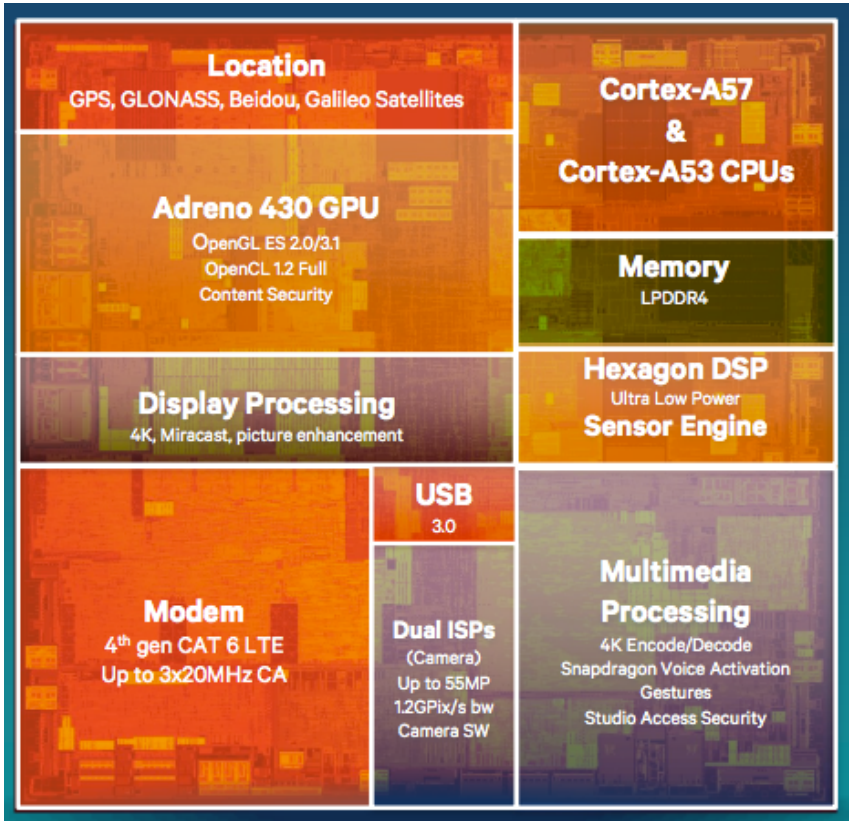

Qualcom Snapdragon 810

What's the Problem?

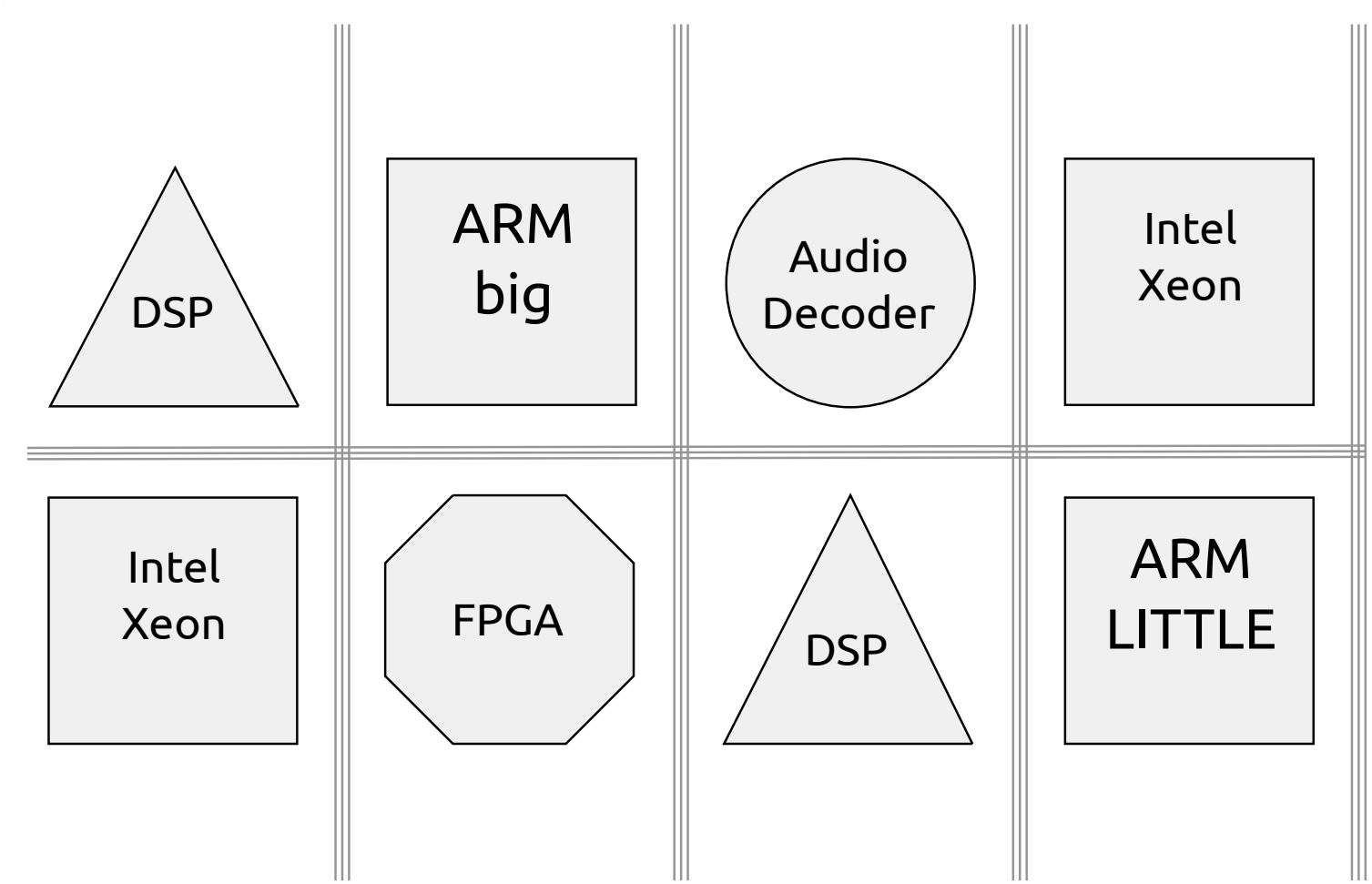

What's the Problem?

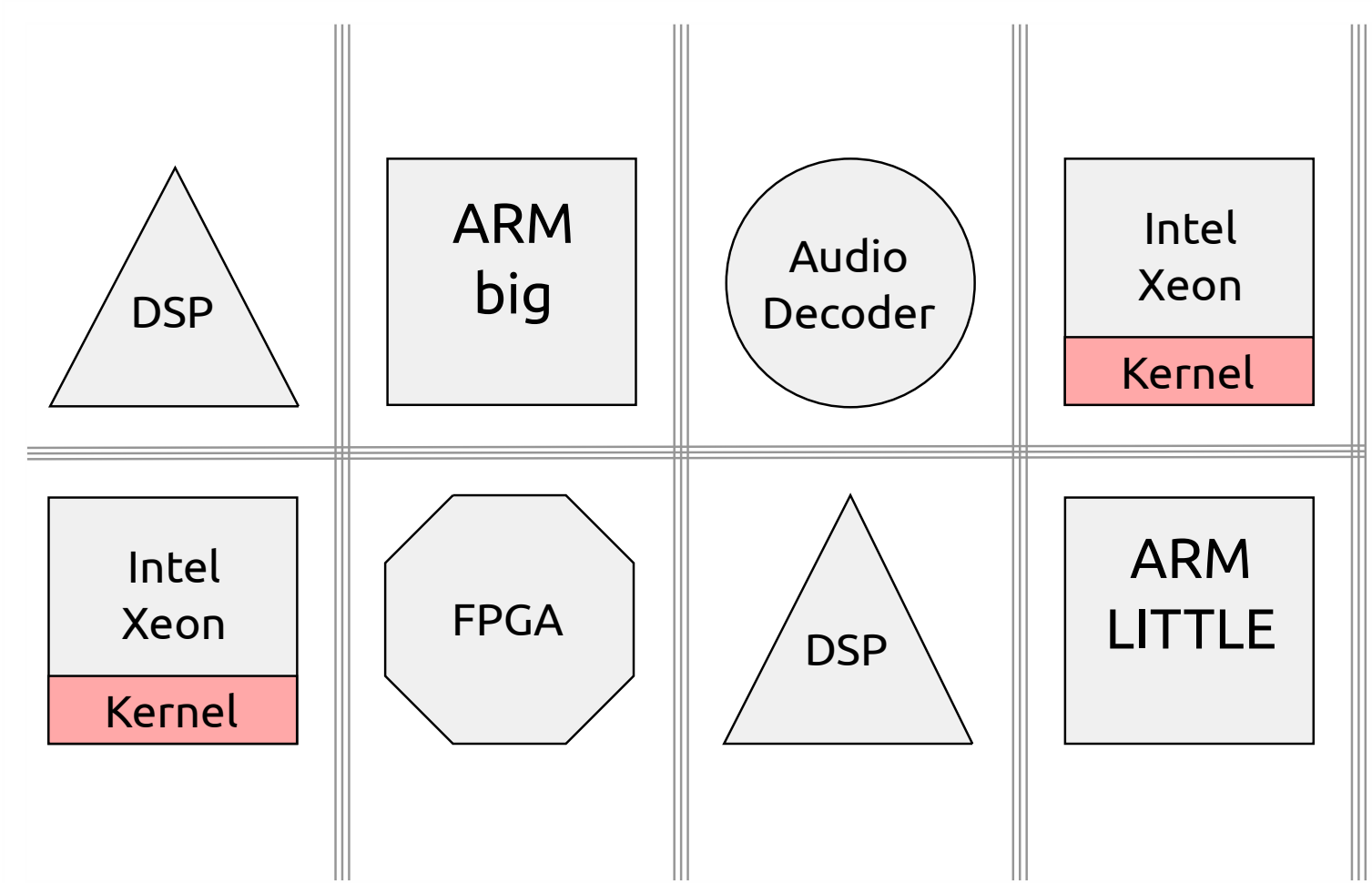

What's the Problem?

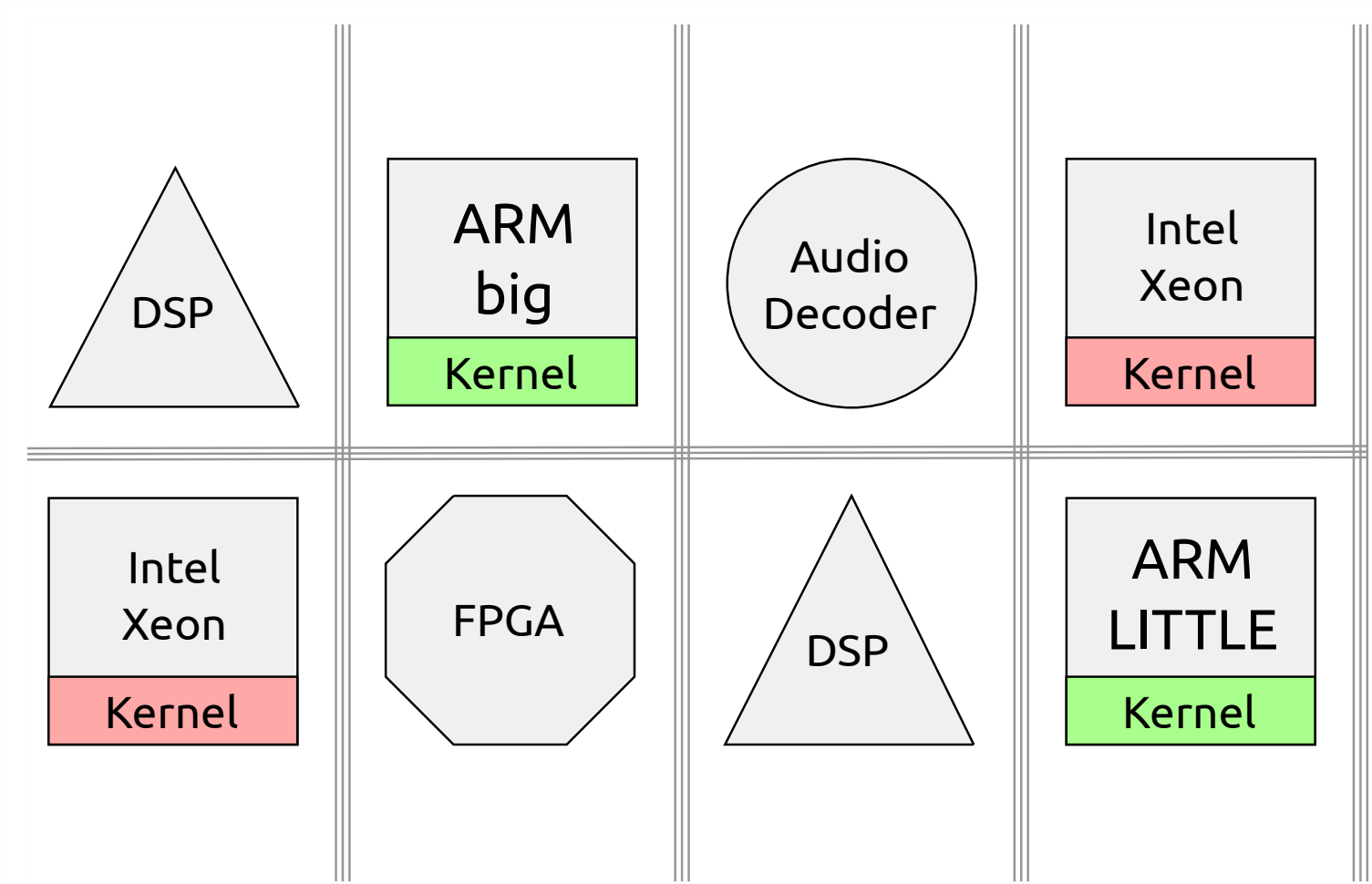

What's the Problem?

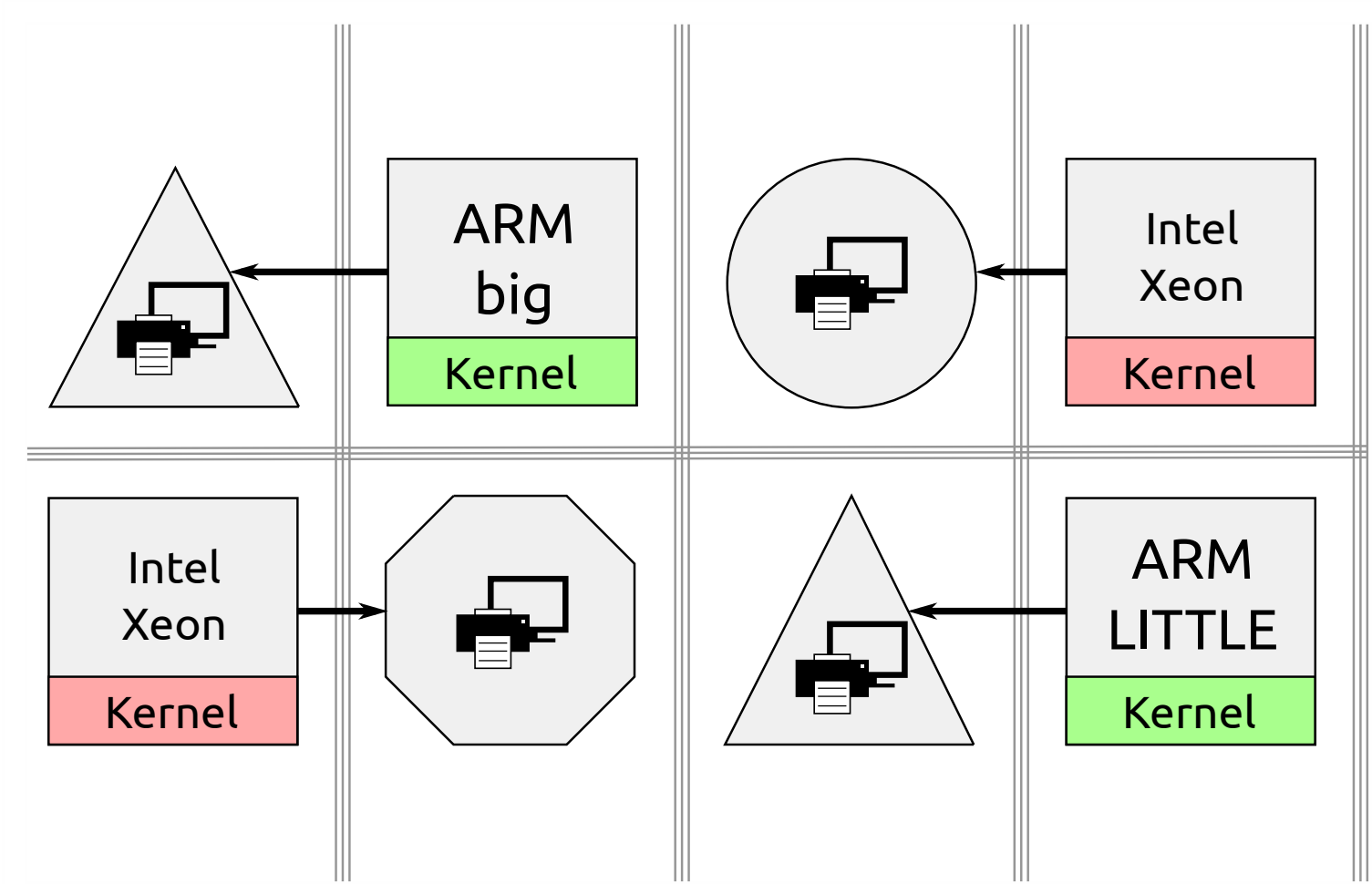

The Goal

Treat all compute units (CU) as first-class citizens:

1. Run untrusted code without causing harm
2. Access operating system services
3. Interact as the master with other CUs

First-class Citizenchip as Enabler

- Pipe communication between arbitrary CUs
- Use parallism on GPUs for FS operations
- Direct access to accelerators from the net
- ...

My Approach

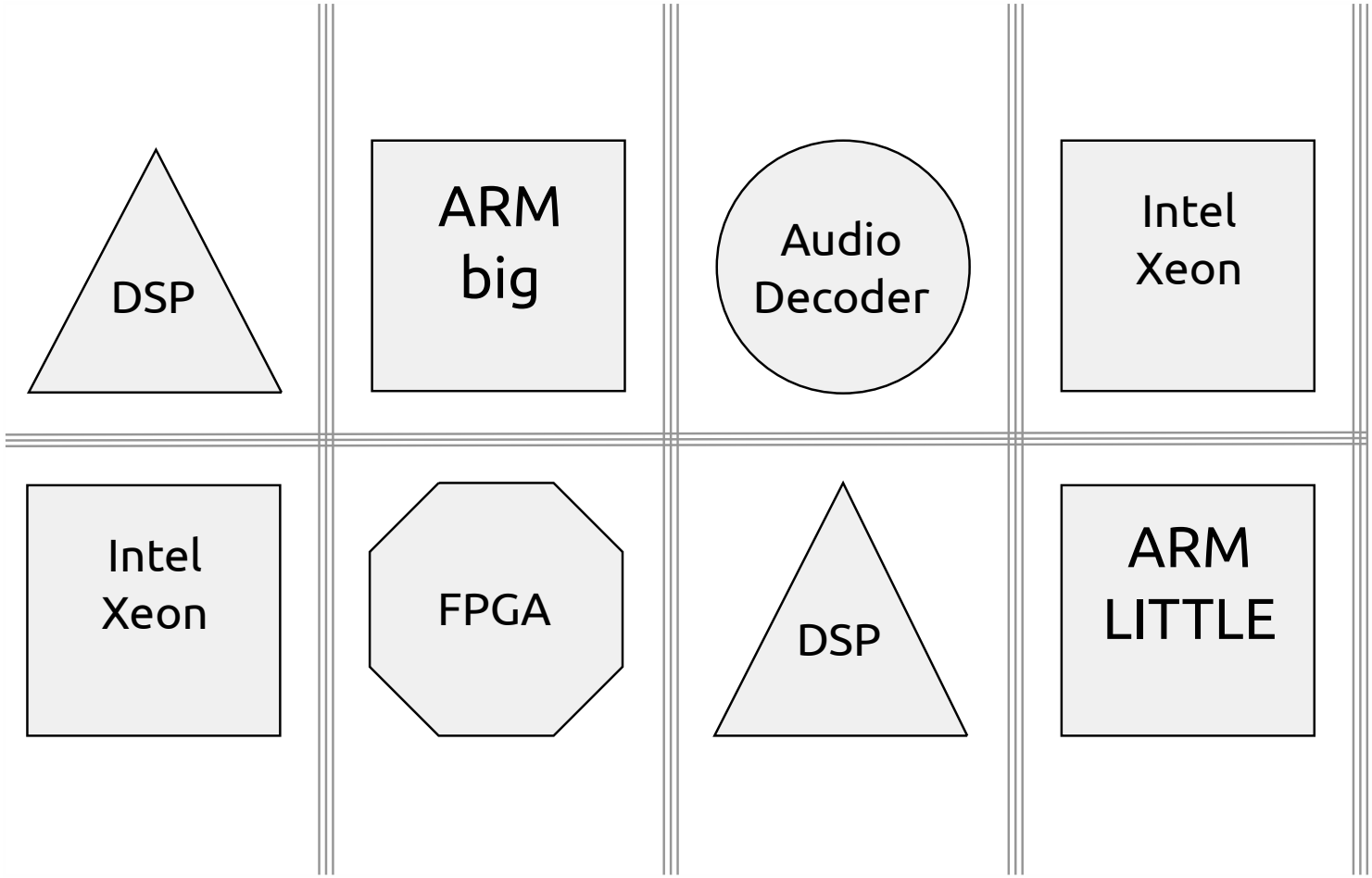
DSP
ARM big
Audio Decoder
Intel Xeon
Intel Xeon
FPGA
DSP
ARM LITTLE

My Approach

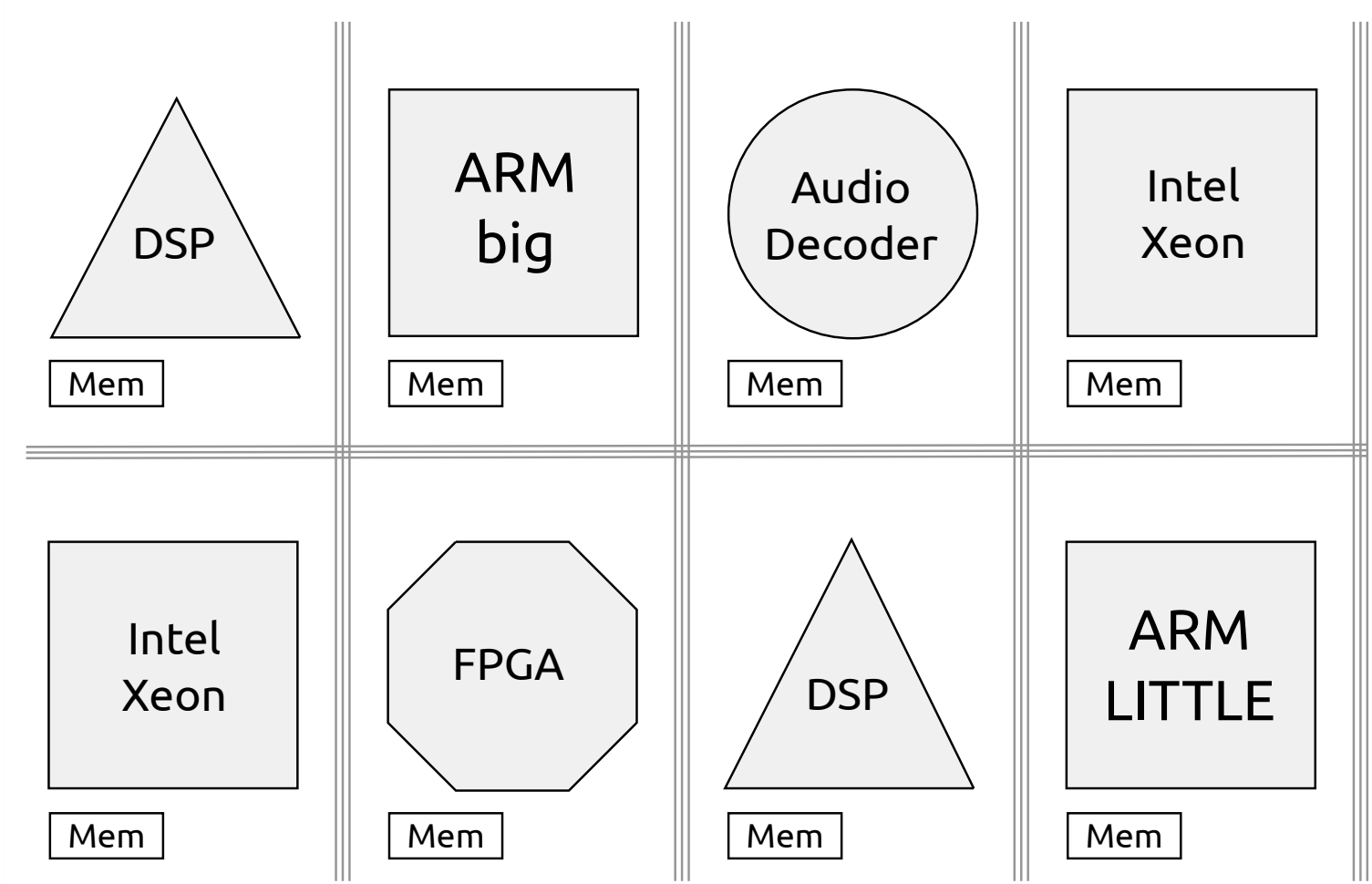
DSP
Mem
ARM big
Mem
Audio Decoder
Mem
Intel Xeon
Mem
Intel Xeon
Mem
FPGA
Mem
DSP
Mem
ARM LITTLE
Mem

My Approach

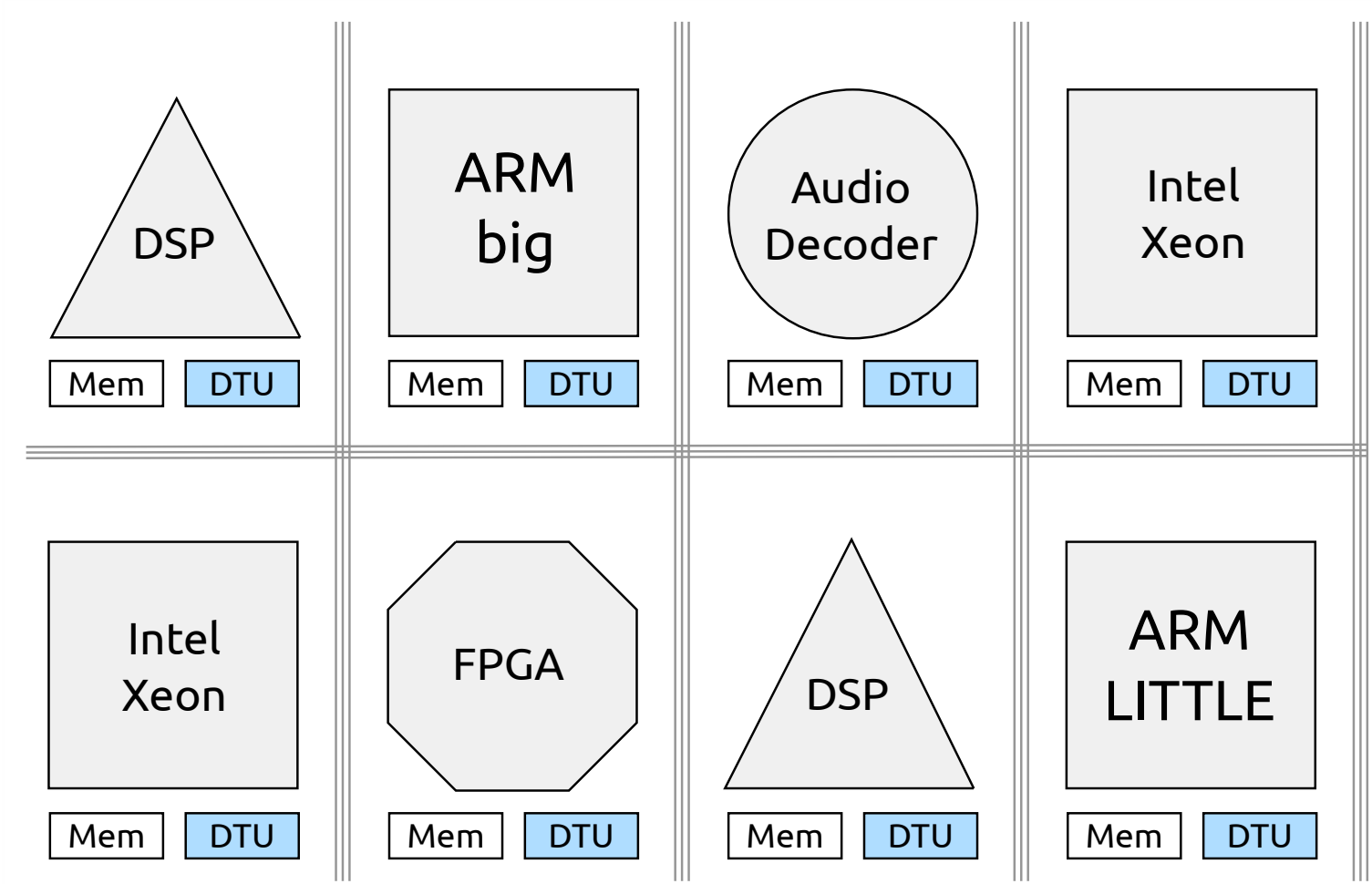
DSP
Mem
DTU
ARM big
Mem
DTU
Audio Decoder
Mem
DTU
Intel Xeon
Mem
DTU
Intel Xeon
Mem
DTU
FPGA
Mem
DTU
DSP
Mem
DTU
ARM LITTLE
Mem
DTU

My Approach

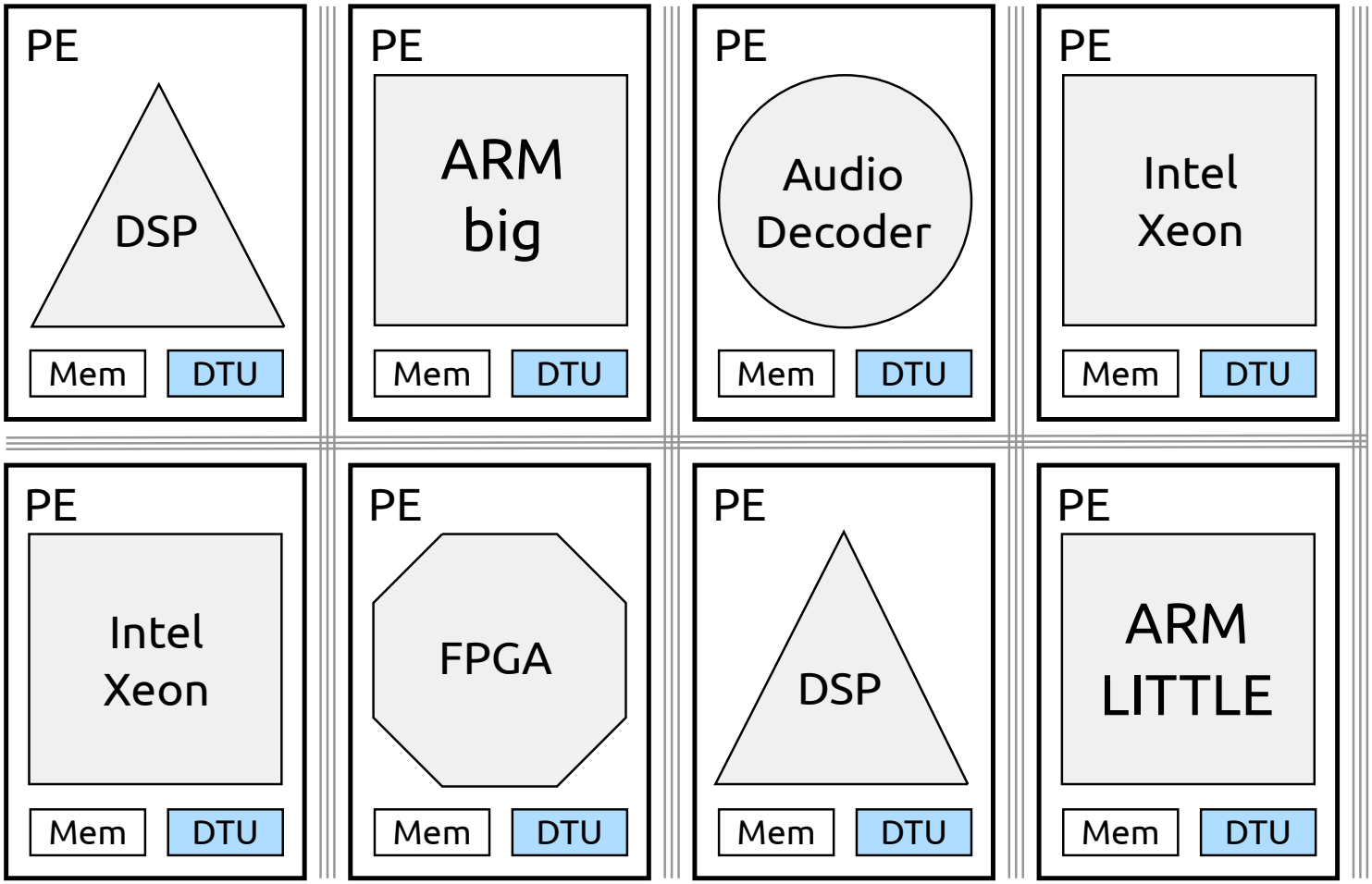
PE
DSP
Mem
DTU
PE
ARM big
Mem
DTU
PE
Audio Decoder
Mem
DTU
PE
Intel Xeon
Mem
DTU
PE
Intel Xeon
Mem
DTU
PE
FPGA
Mem
DTU
PE
DSP
Mem
DTU
PE
ARM LITTLE
Mem
DTU

My Approach

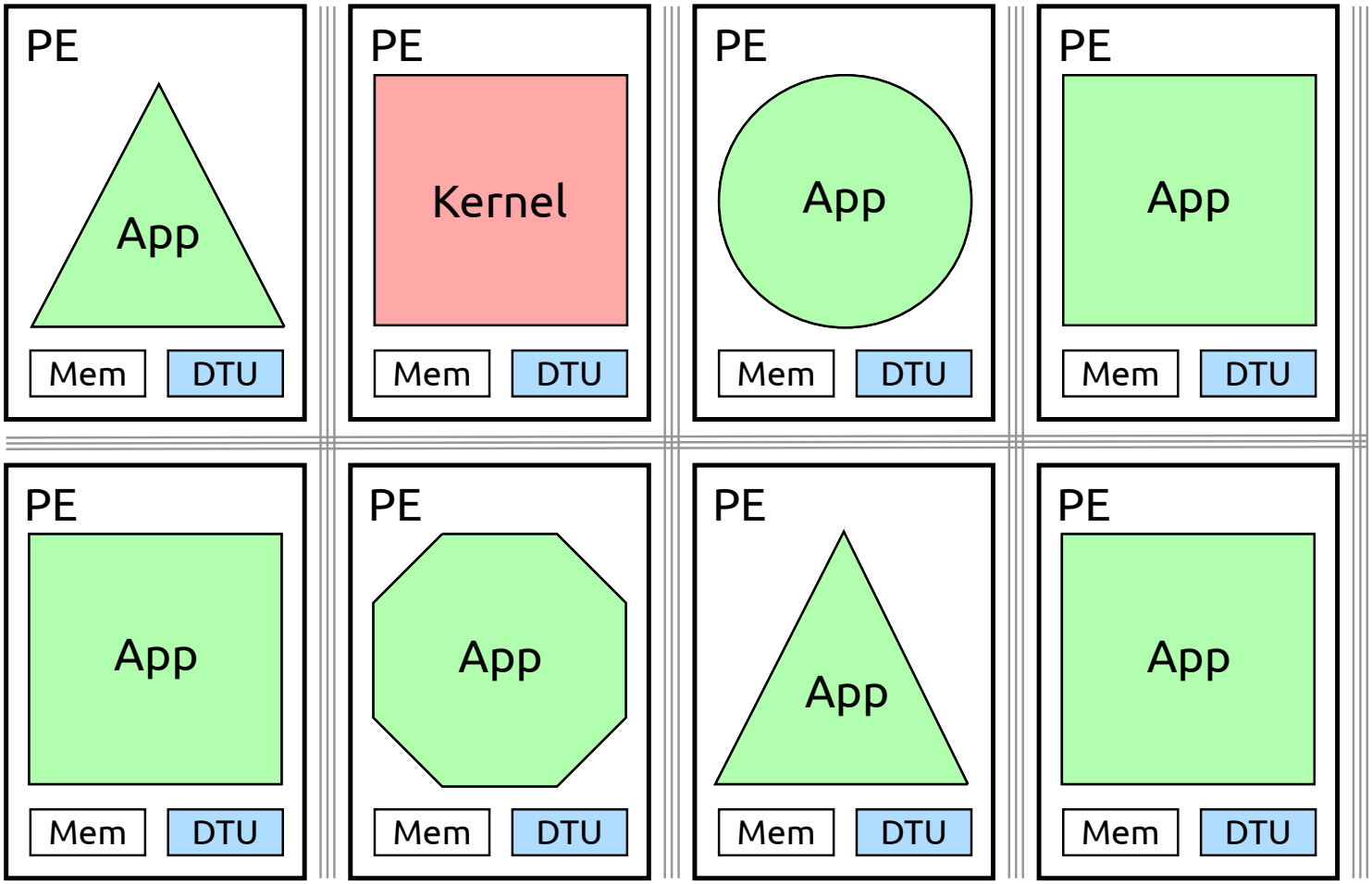
PE
App
Mem
DTU
PE
Kernel
Mem
DTU
PE
App
Mem
DTU
PE
App
Mem
DTU
PE
App
Mem
DTU
PE
App
Mem
DTU
PE
App
Mem
DTU
PE
App
Mem
DTU

My Approach

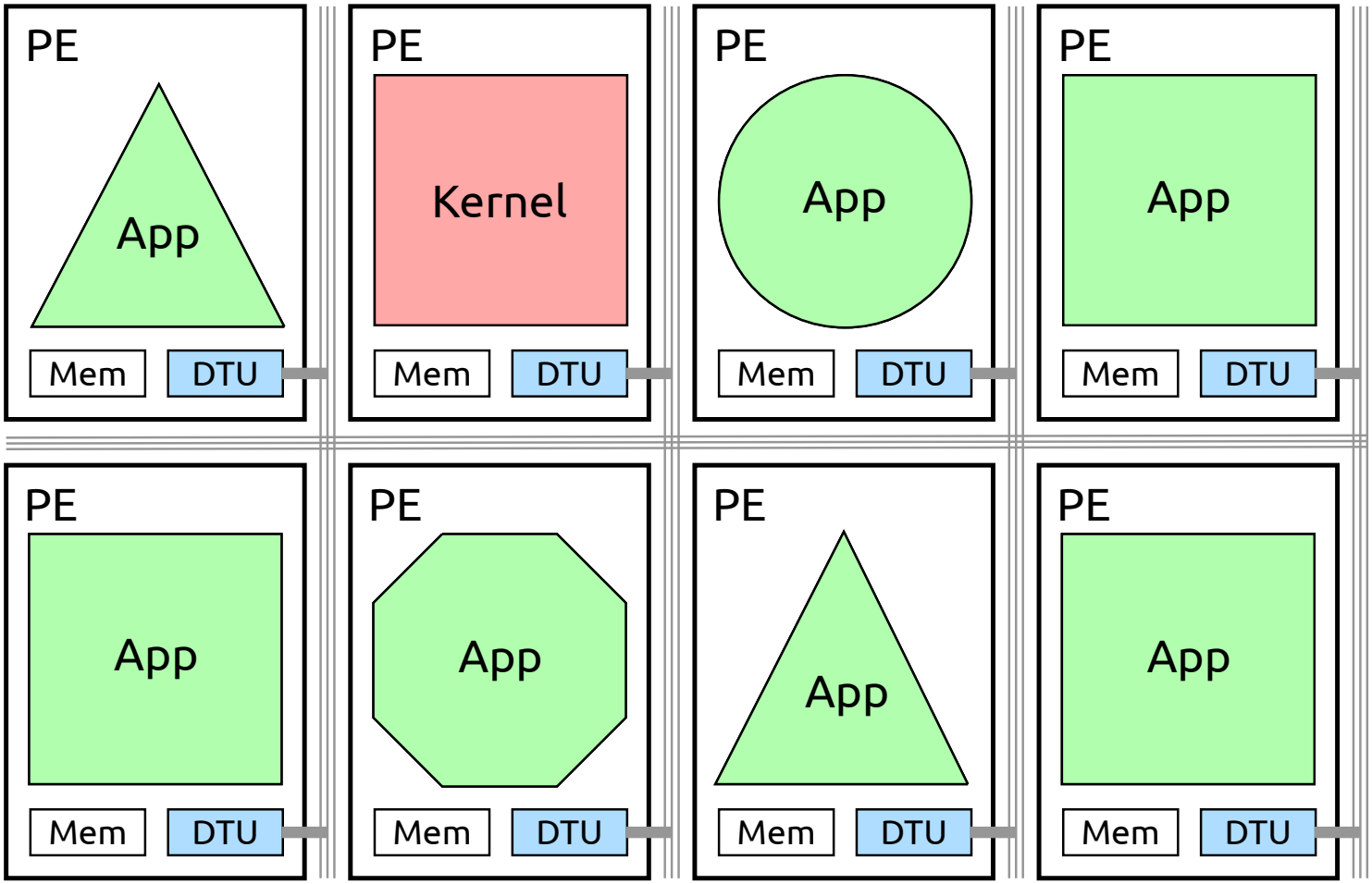
PE
App
Mem
DTU
PE
Kernel
Mem
DTU
PE
App
Mem
DTU
PE
App
Mem
DTU
PE
App
Mem
DTU
PE
App
Mem
DTU
PE
App
Mem
DTU
PE
App
Mem
DTU

Outline

Data Transfer Unit

- Supports memory access and message passing
- Provides a number of endpoints
- Each endpoint can be configured for:
  1. Accessing a piece of memory (contiguous range, byte granular)
  2. Receiving messages into a ringbuffer
  3. Sending messages to a receiving endpoint
- Configuration only by kernel, usage by application
- Direct reply on received messages
- Credits are used to prevent DoS attacks

Data Transfer Unit – Example

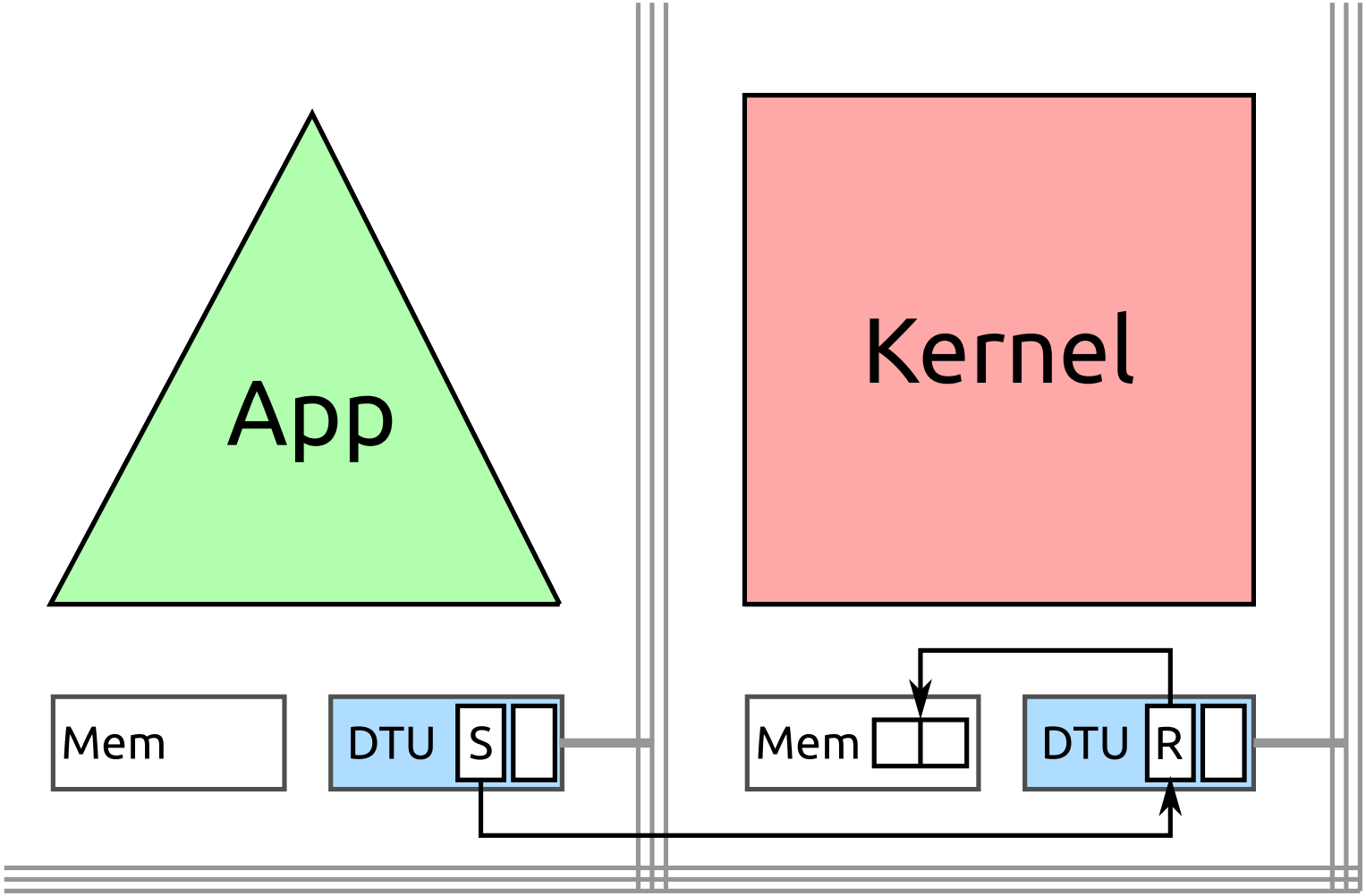

Data Transfer Unit – Example

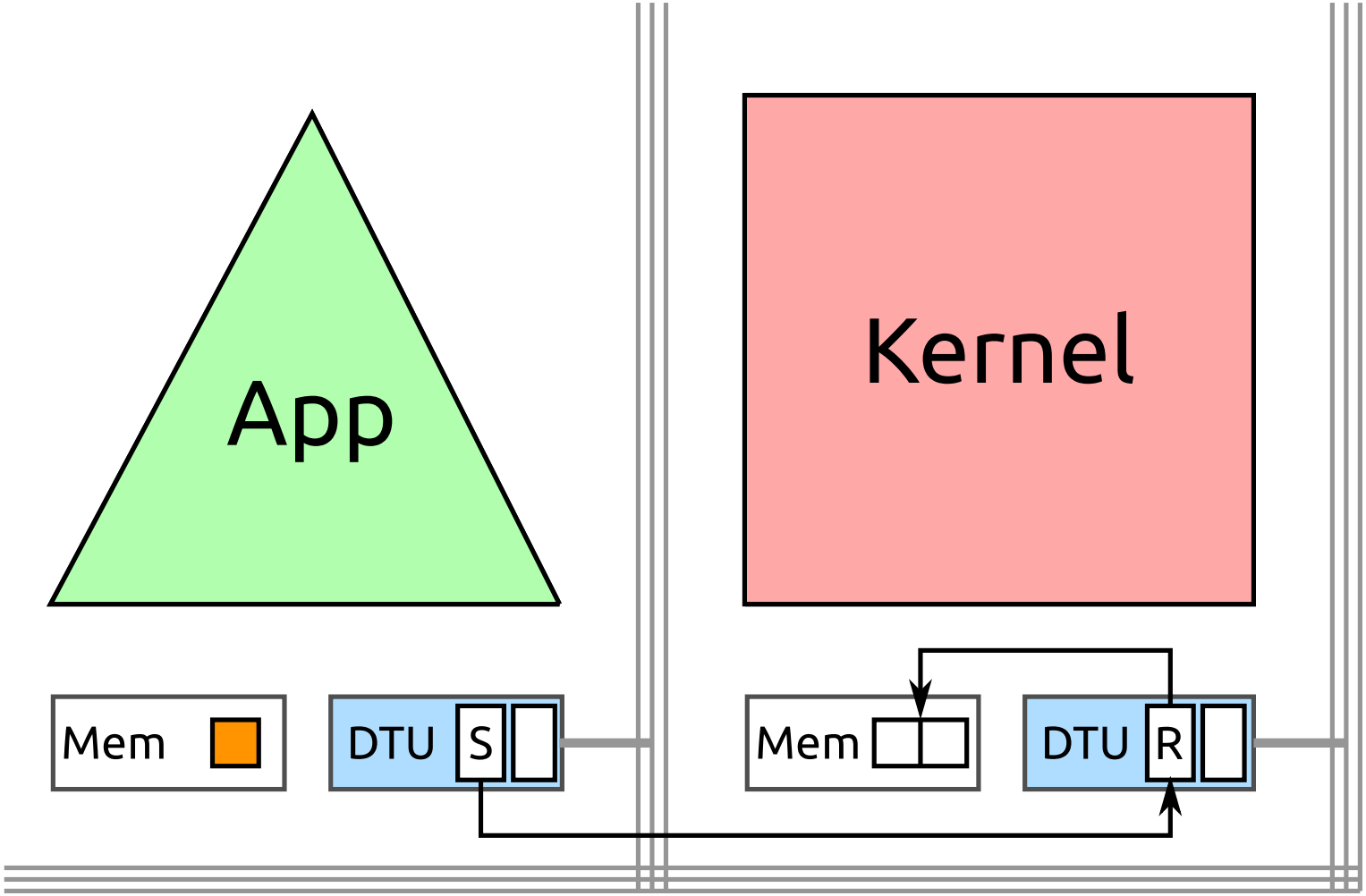

Data Transfer Unit – Example

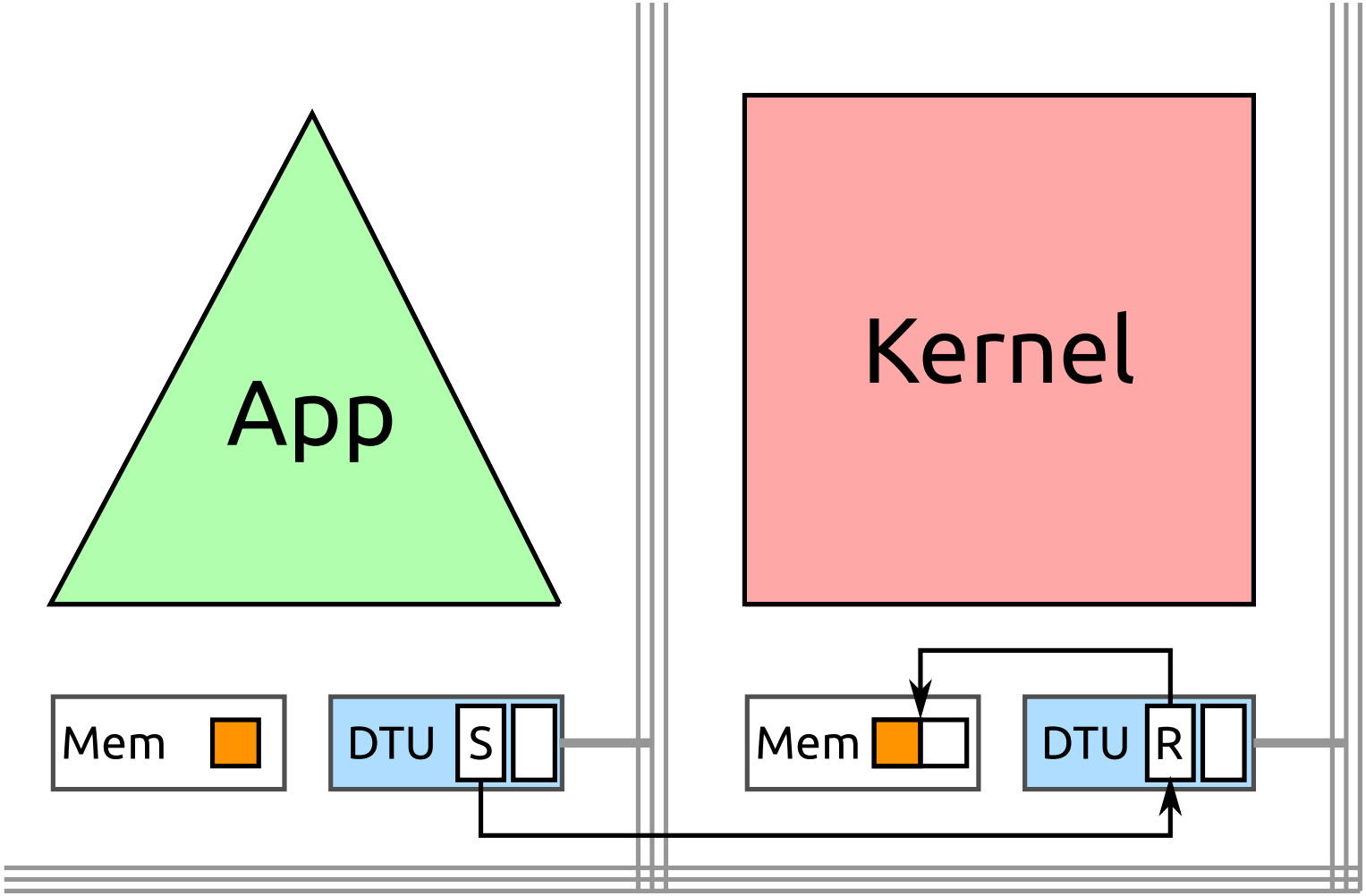

Outline

Tomahawk 2 and 4

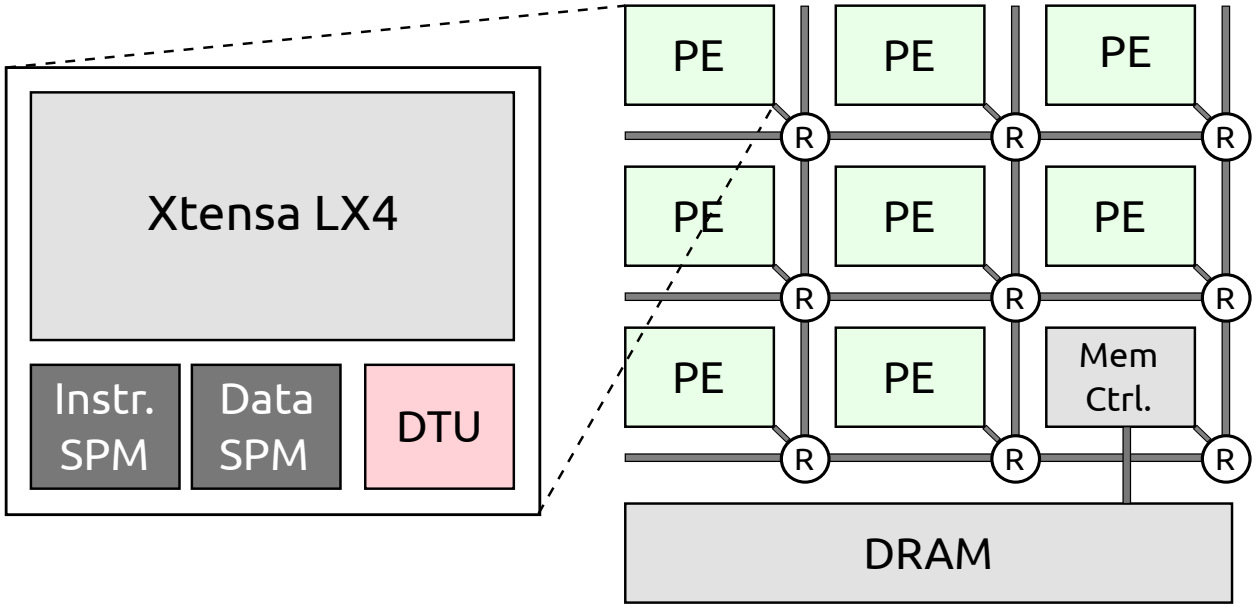

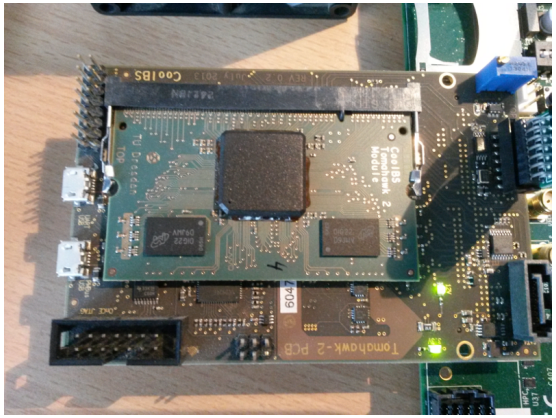

- Cores attached to NoC with DTU
- No privileged mode
- No MMU, no caches, but SPM
- T2: simple DTU; T4: most features

Linux

- M^3 runs on Linux using it as a virtual machine
- A process simulates a PE, having two threads (CPU + DTU)
- DTUs communicate over UNIX domain sockets
- No accuracy because
  - Programs are directly executed on host
  - Data transfers have huge overhead compared to HW
- Very useful for debugging and early prototyping

gem5

- Modular platform for computer-system architecture research
- Supports various ISAs (x86, ARM, Alpha, SPARC, . . .)
- Cycle-accurate simulation
- Has an out-of-order core model
- We built a DTU for gem5
- Support for caches and virtual memory
- We also added hardware accelerators

gem5 – Example Configuration

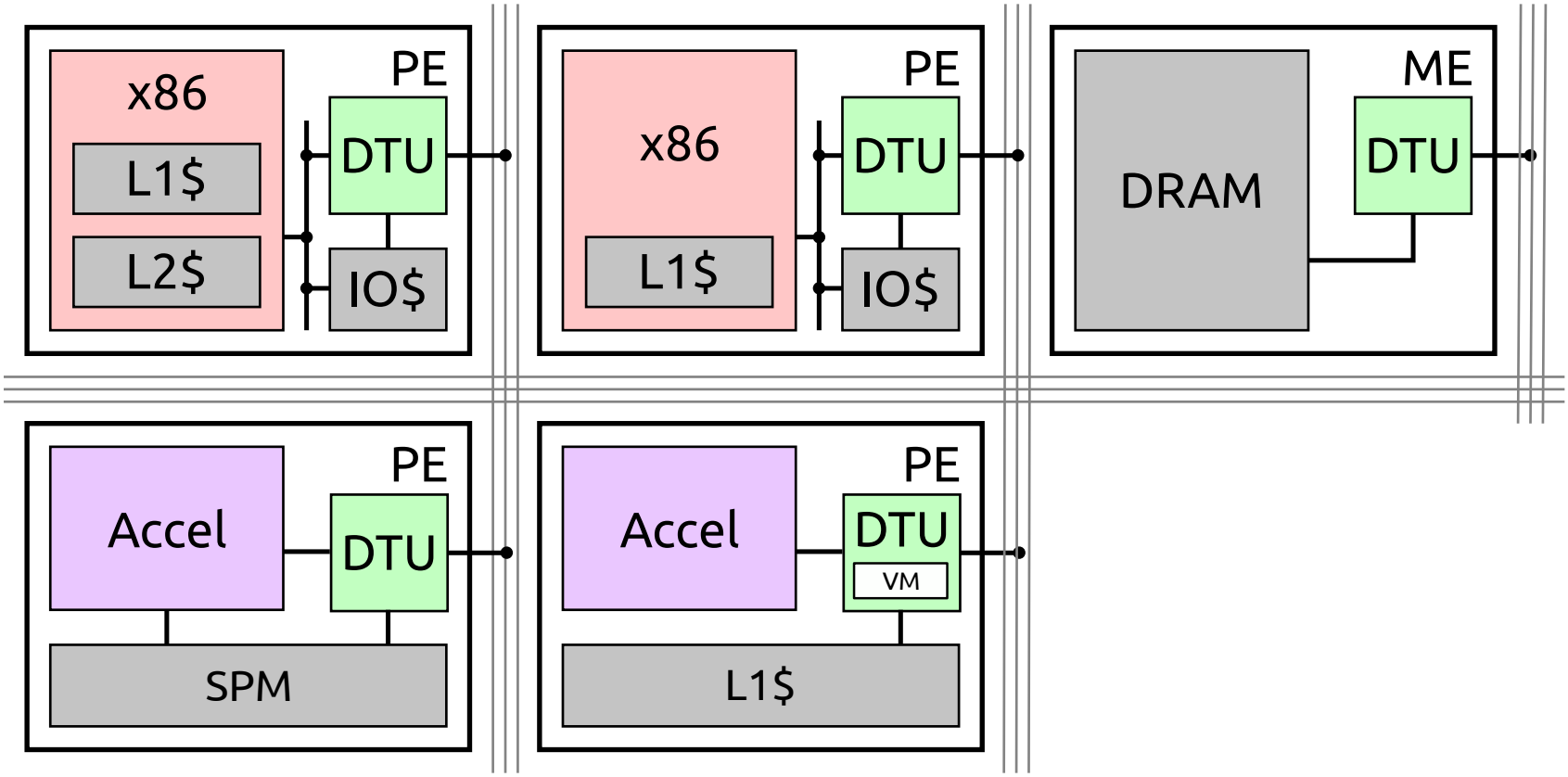

Outline

Introduction

- M^3 uses ideas from L4, but implemented from scratch
- Provides mechanisms for PEs, memory and communication
- Drivers, filesystems, ... are implemented as services
- Kernel manages permissions, using capabilities
- DTU enforces permissions (communication, memory access)
- Kernel has no ISA-specific code

Capabilities

M^3 has the following capabilities:

- Send: send messages to a receive EP
- Receive: receive messages from send EPs
- Memory: access remote memory via DTU
- Mapping: access remote memory via load/store
- Service: create sessions
- Session: exchange caps with service
- VPE: execute code on a PE

Capability Exchange

- Kernel provides syscalls to create, exchange and revoke caps
- There are two ways to exchange caps:
  1. Directly with another VPE (typically, a child VPE)
  2. Over a session with a service
- The kernel offers two operations:
  1. Delegate: send capability to somebody else
  2. Obtain: receive capability from somebody else

Communication Overview

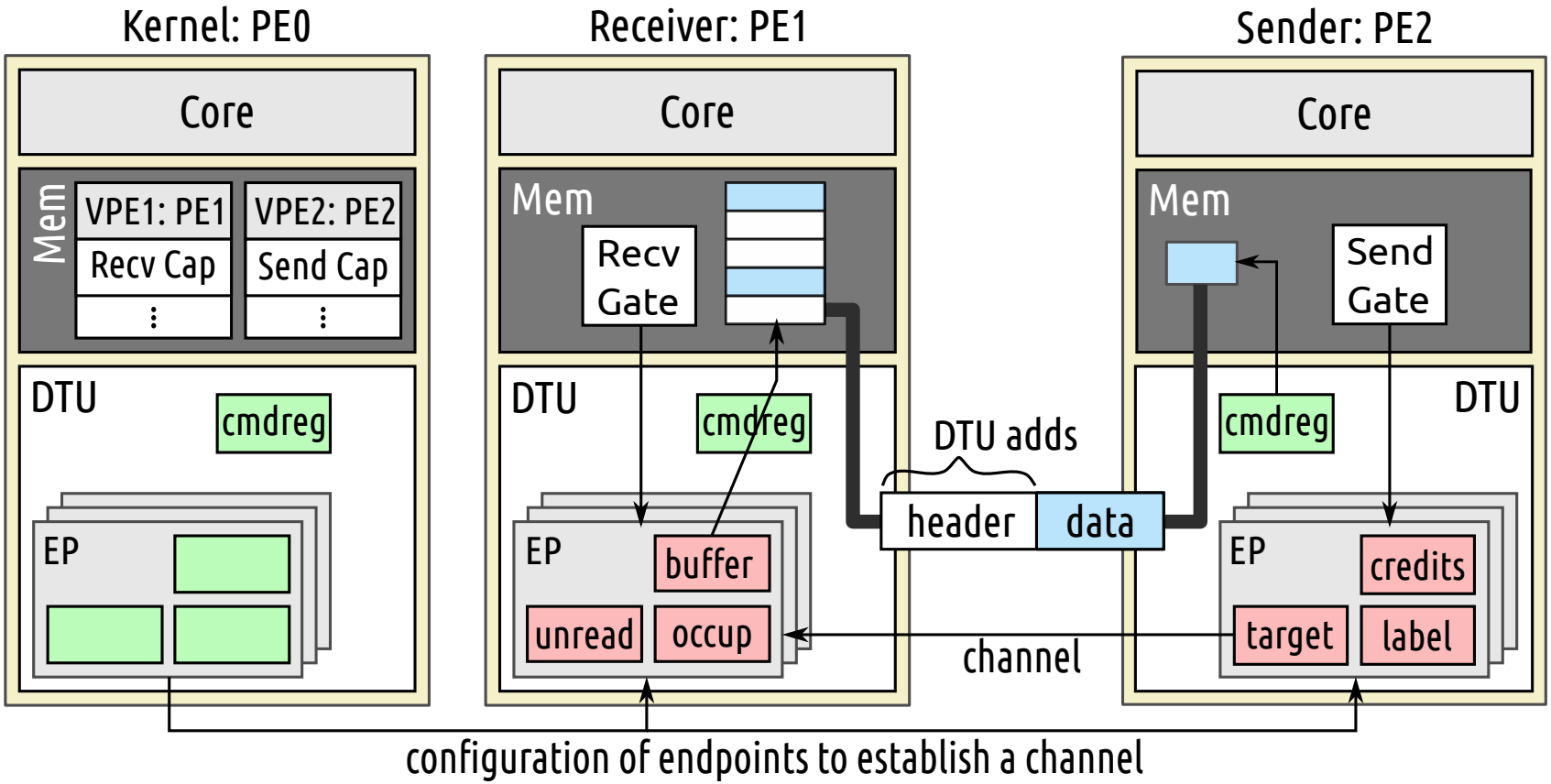

Communication

- System call to create send cap for specific EP and VPE
- Typically created for own VPE
- Binds a label to the send cap for secure identification
- Can then be delegated to someone else
- To use a send cap, an DTU EP needs to be configured
- The kernel provides a syscall for that purpose
- This indirection allows EP multiplexing and blocking

Memory

- Syscall `reqmem` can be used to request remote memory
- Like with send caps, an EP needs to be configured to access it
- Afterwards, the DTU can be instructed to read/write
- Behaves like RDMA (no SW involved)
- Syscall `derivemem` to create a subset of mem cap

VPEs

- Syscall `createvpe` to create a new VPE
- The kernel assigns the VPE to a suitable PE, if possible
- App gets VPE cap and memory cap for the whole PE memory
- Syscall to start it and wait for its completion (`exit`)
- Can exchange capabilities with the VPE
  - before starting it: e.g., delegate inputs
  - after it's finished: e.g., obtain results

VPEs – Examples

Executing ELF-Binaries

```
VPE vpe("test");
char *args[] = {"/bin/hello", "foo", "bar"};
vpe.exec(3, args);
```

VPEs – Examples

Executing ELF-Binaries

```
VPE vpe("test");
char *args[] = {"/bin/hello", "foo", "bar"};
vpe.exec(3, args);
```

Asynchronous Lambdas

```
VPE vpe("test");
MemGate mem = MemGate::create_global(0x1000, RW);
vpe.delegate(CapRngDesc(mem.sel(), 1));
vpe.run_async([&mem]() {
    mem.read(buf, sizeof(buf));
    cout << "Done reading!\n";
});
```

Filesystem: *m3fs*

- Filesystem service is implemented outside of kernel
- m3fs is (currently) an in-memory filesystem

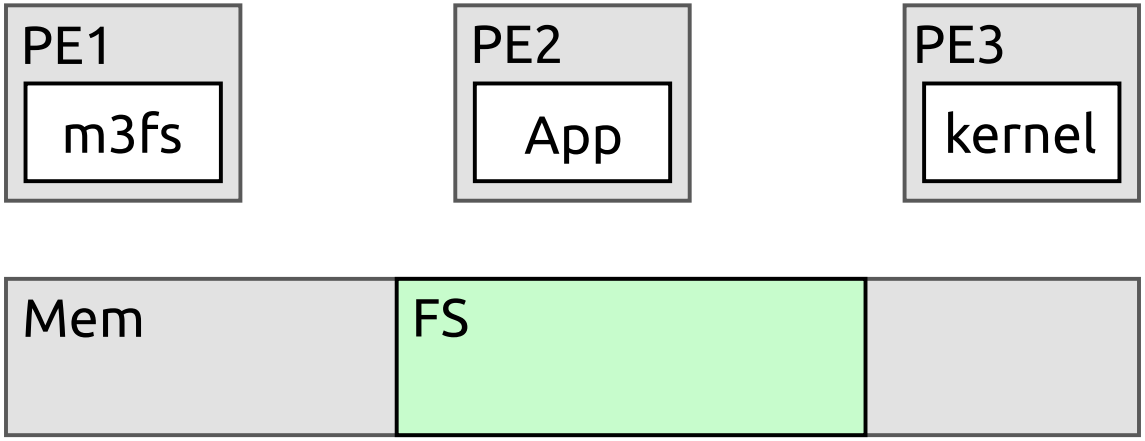

Filesystem: *m3fs*

- Filesystem service is implemented outside of kernel
- m3fs is (currently) an in-memory filesystem

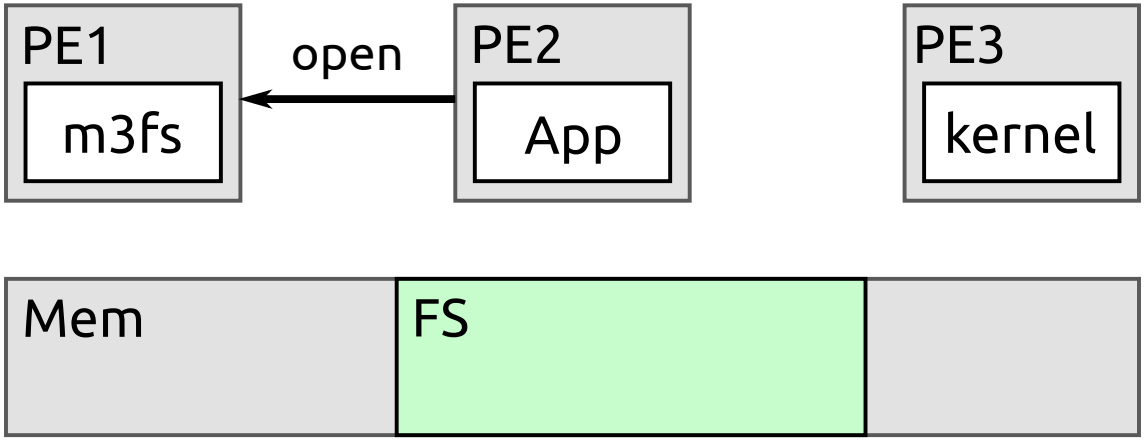

Filesystem: *m3fs*

- Filesystem service is implemented outside of kernel
- m3fs is (currently) an in-memory filesystem

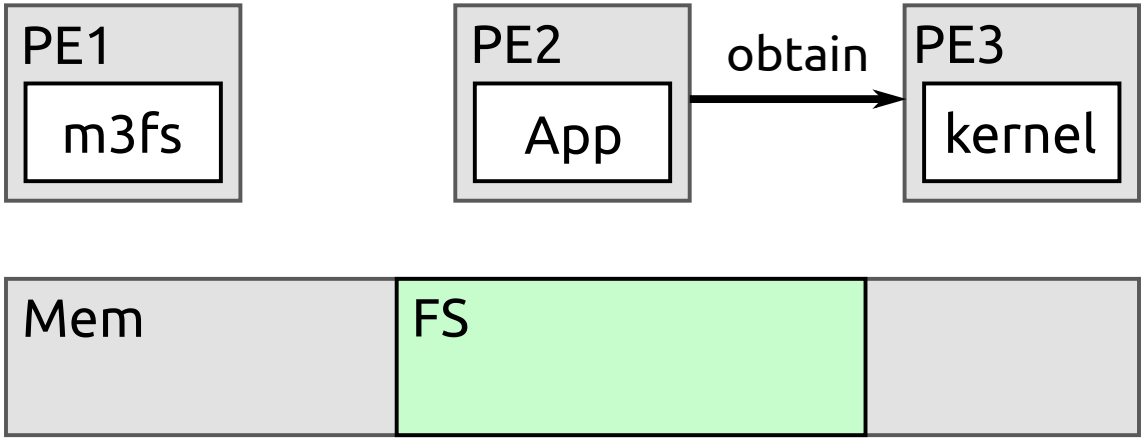

Filesystem: *m3fs*

- Filesystem service is implemented outside of kernel
- m3fs is (currently) an in-memory filesystem

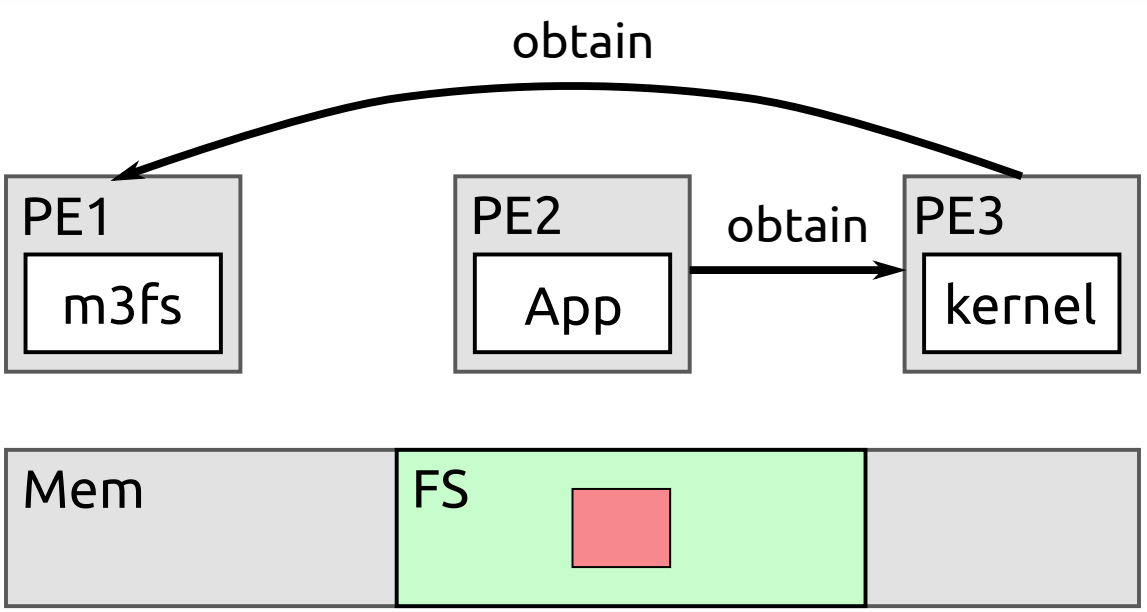

Filesystem: *m3fs*

- Filesystem service is implemented outside of kernel
- m3fs is (currently) an in-memory filesystem

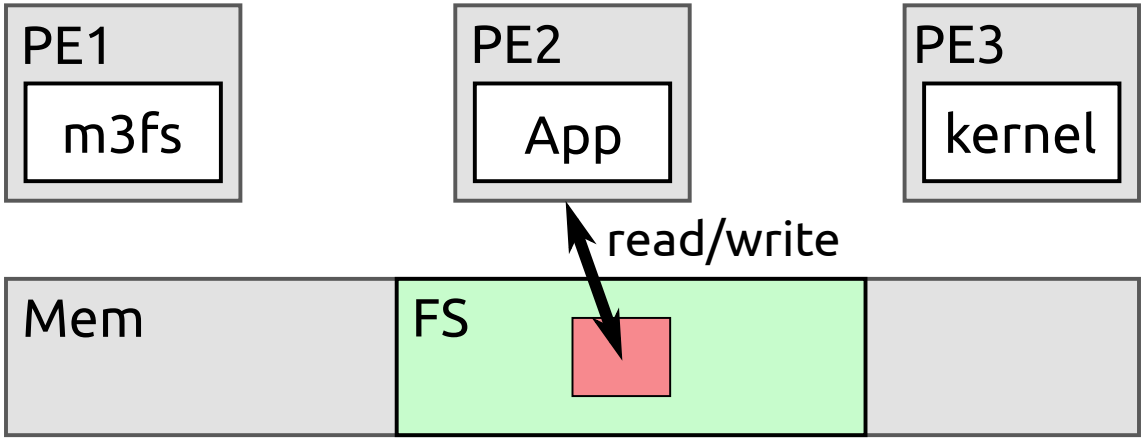

Pipes: Direct Pipe

Pipes: Direct Pipe

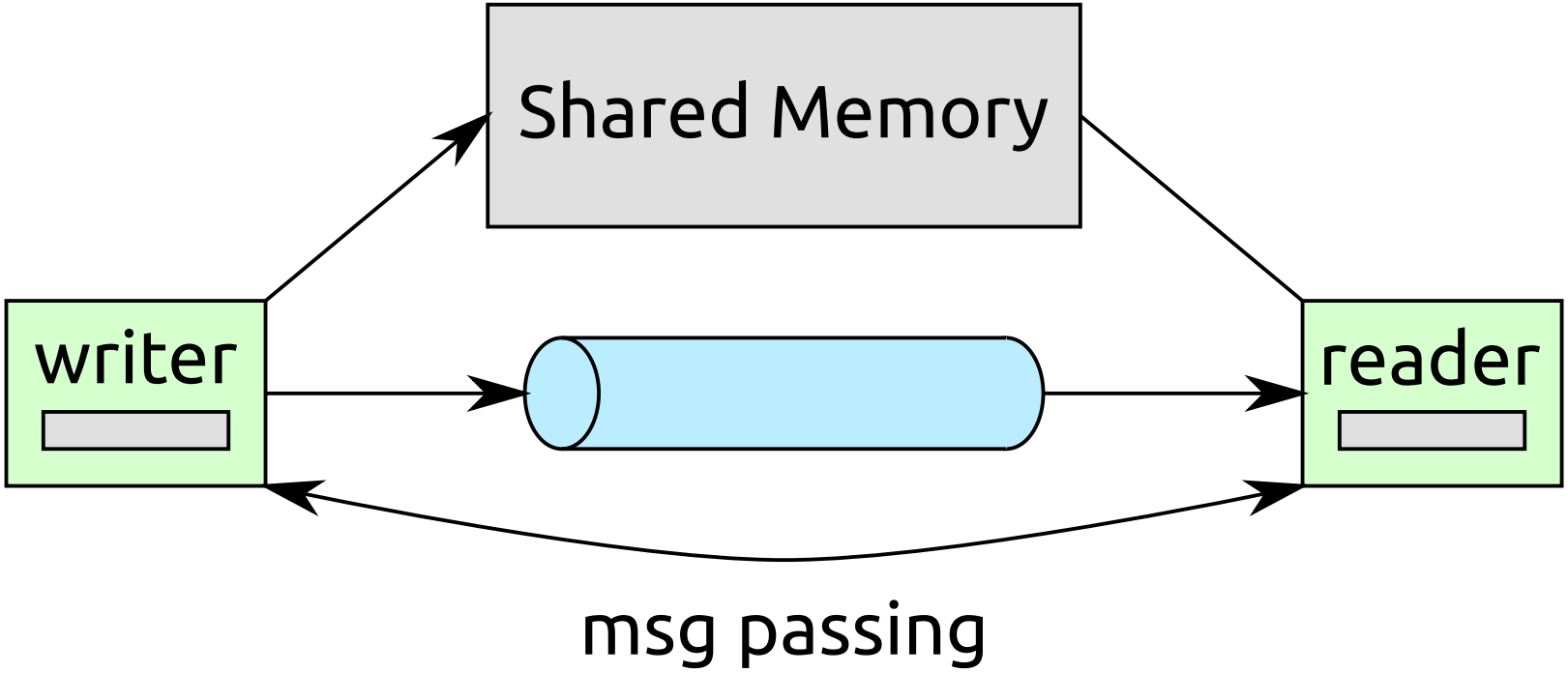

Pipes: Indirect Pipe

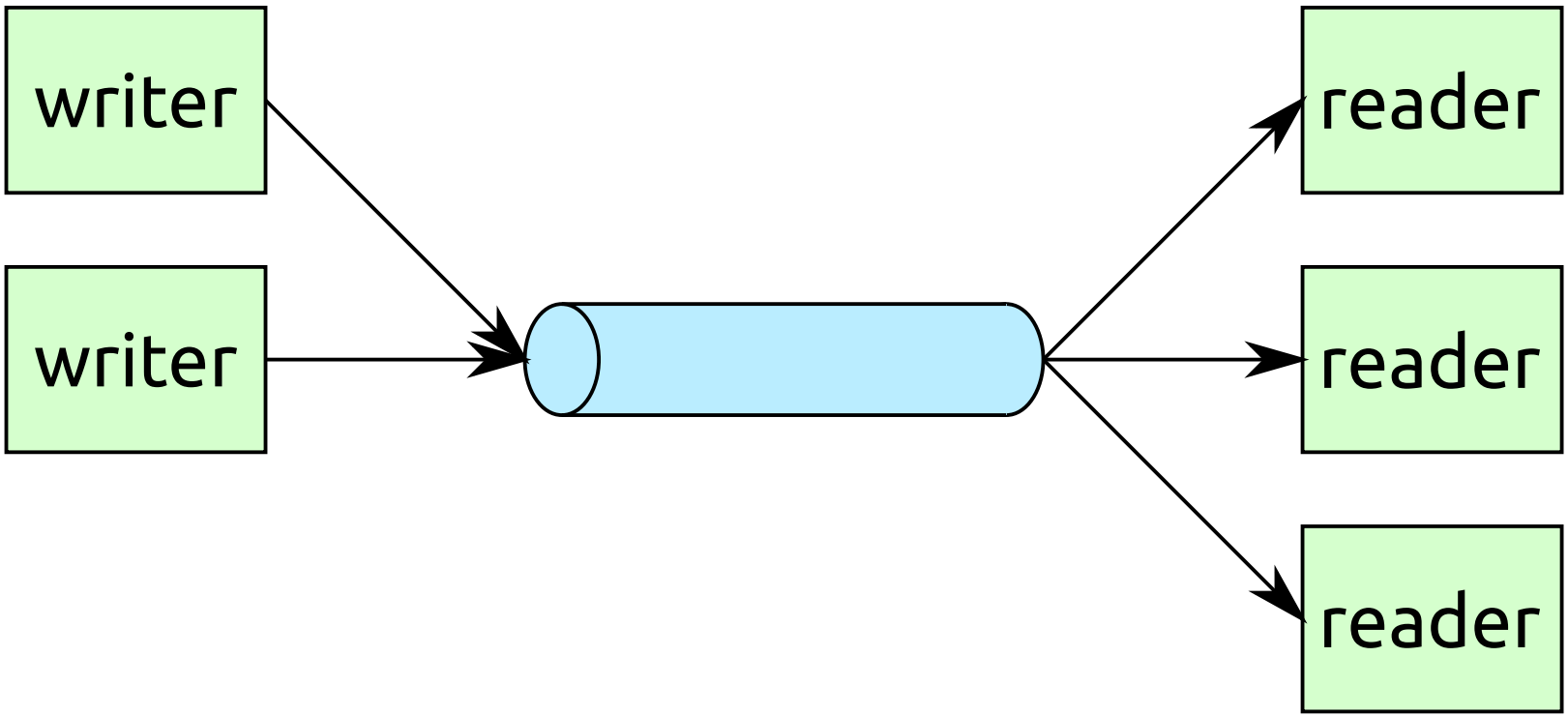

Pipes: Indirect Pipe

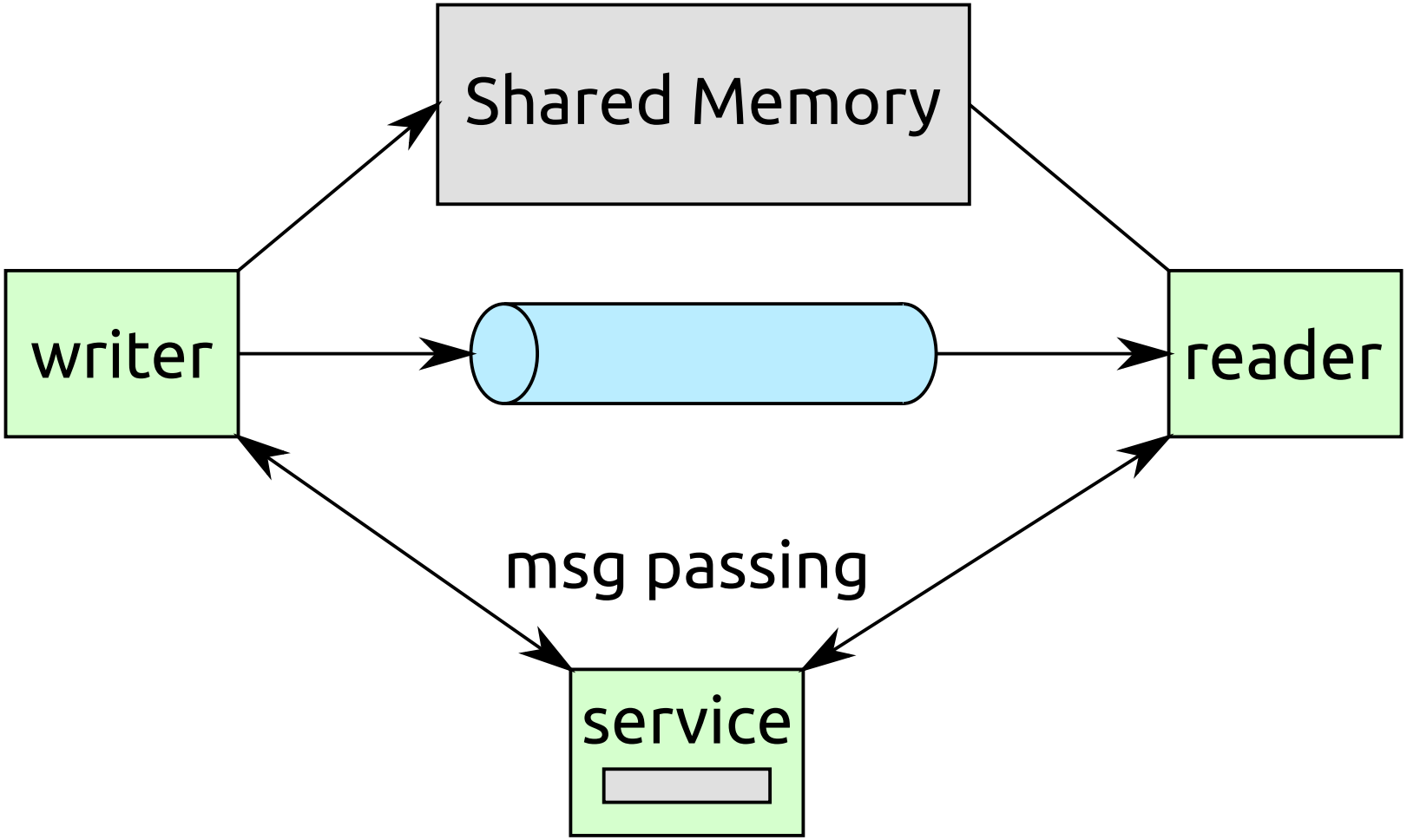

Files on Top of Capabilities

- libm3 provides abstractions to work with files, pipes, ...
- Every VPE has a mountspace and file descriptors
- These can be inherited to child VPEs
- Pure convenience: security is based on capabilities

Example

```
VPE vpe("my vpe");
vpe.fds()->set(STDIN_FD, pipe_fd);
vpe.fds()->set(STDOUT_FD, VPE::self().fds()->get(
    STDOUT_FD));
vpe.obtain_fds();
vpe.run_async([] {
    File *in = VPE::self().fds()->get(STDIN_FD);
    // ...
});
```

Demo

Demo

Outline

Ongoing Work

- Multiple instances of the kernel/services (by Matthias Hille)
- Port of the musl C library (by Sherif Shehabaldin)
- Integration of a NIC (by Georg Kotheimer)
- Integration of an IDE controller (by Lukas Landgraf)

Summary

- DTU+M^3 is a new point in the design space for systems
- Supports untrusted code and OS services on all PEs
- Supports direct communication between all PEs
- DTU abstracts heterogeneity and provides common interface
- M^3 kernel controls DTUs remotely
- M^3 is available at `https://github.com/TUD-OS/M3`