TECHNISCHE UNIVERSITÄT DRESDEN

Faculty of Computer Science Institute of System Architecture, Operating Systems Group

COMPLEX LAB: MICROKERNEL-BASED SYSTEMS

CARSTEN WEINHOLD

Important Dates & Deadlines

- 23 October 2018: Introduction
- 18 November 2018: 1st assignment due
- 20 November 2018: Sessions & memory
- 8 January 2019: Graphical console
- 29 January 2019: Keyboard driver
- 31 March 2019: Final assignment due

- Starting November 27 will switch time slots:
  - Tuesday, 2:50pm: Lecture
  - Tuesday, 4:40pm: Exercise / complex lab

Assignment 1

- You have basic understanding of:
  - How to start programs
  - How to configure communication channels
  - Basic L4Re IPC framework usage
- Client and server are communicating
- But everything is static: only one client per server

Sessions

- Scenario:
  - Multiple clients per server
  - Server stores per-client data, needs to distinguish between clients
- Poor man's solution:
  - Assign dynamic ID to each client
  - Client sends ID whenever it calls the server
  - Problem: IDs can be faked
- Better solution: Sessions
  - One IPC gate per client
  - Clients can be distinguished based on gate label
  - Ideally: clients need not do anything special

Sessions in L4Re

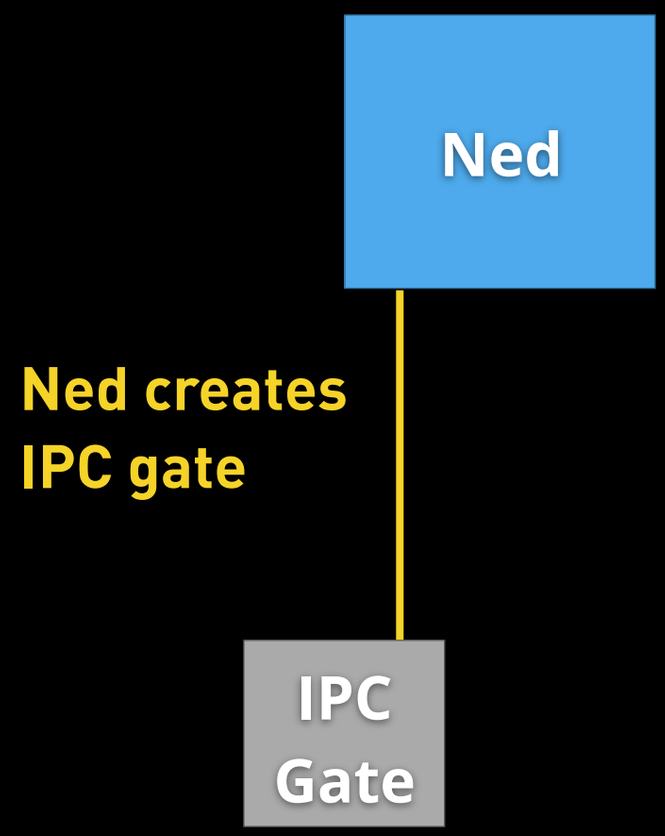

Sessions in L4Re

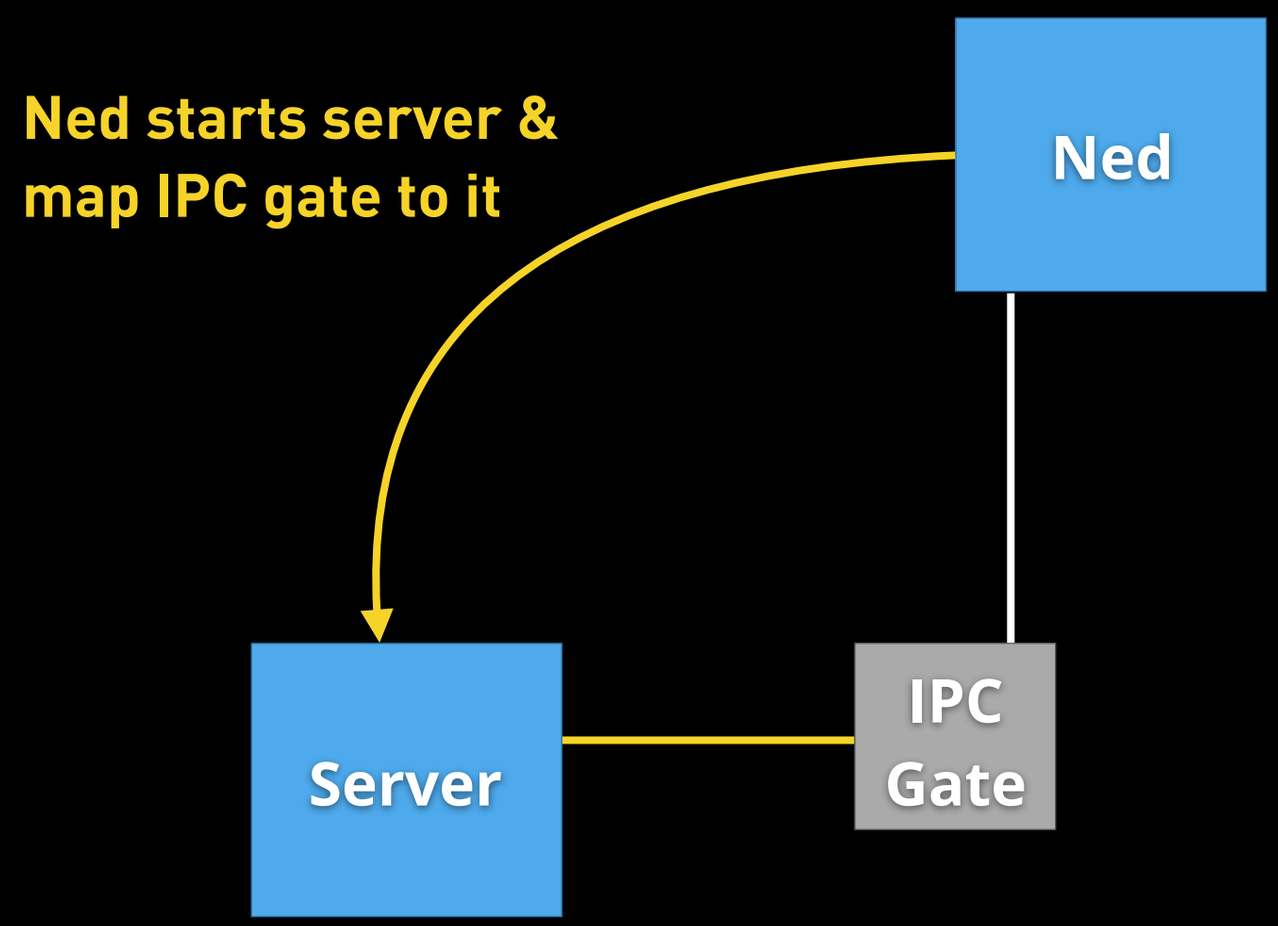

Sessions in L4Re

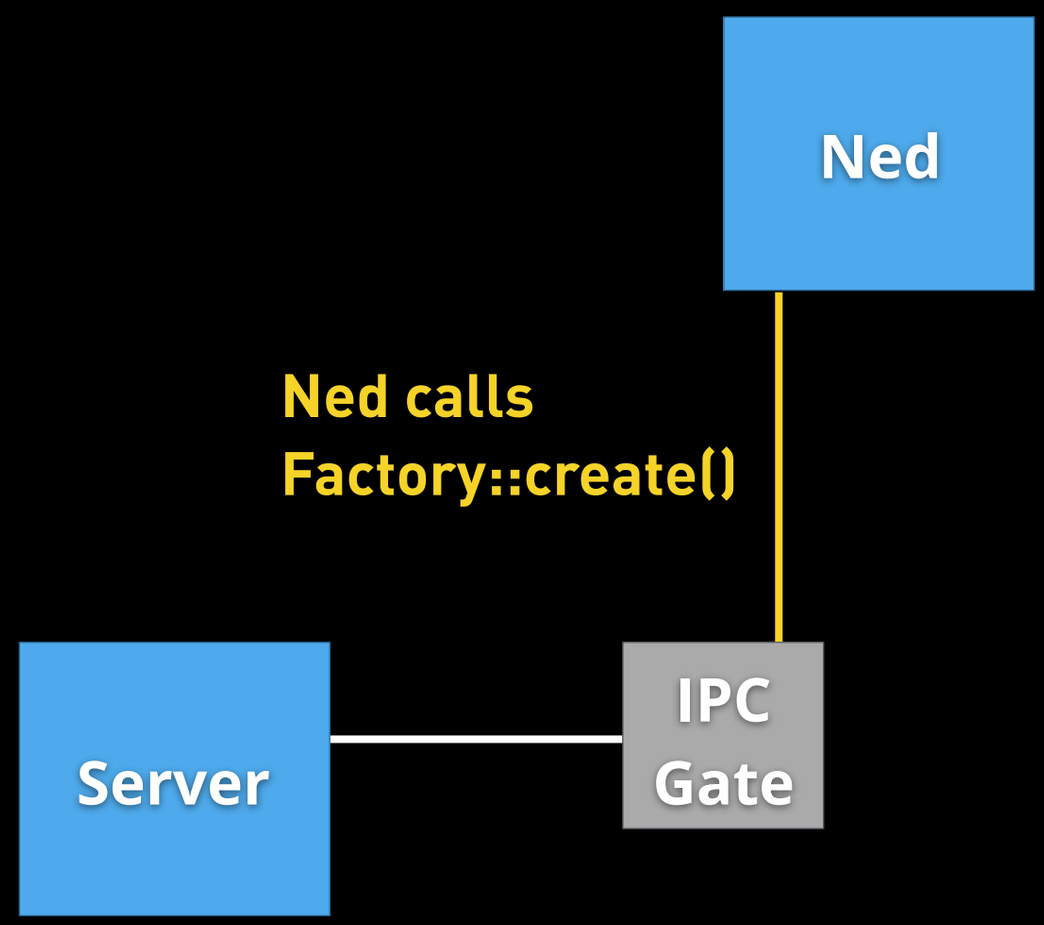

Sessions in L4Re

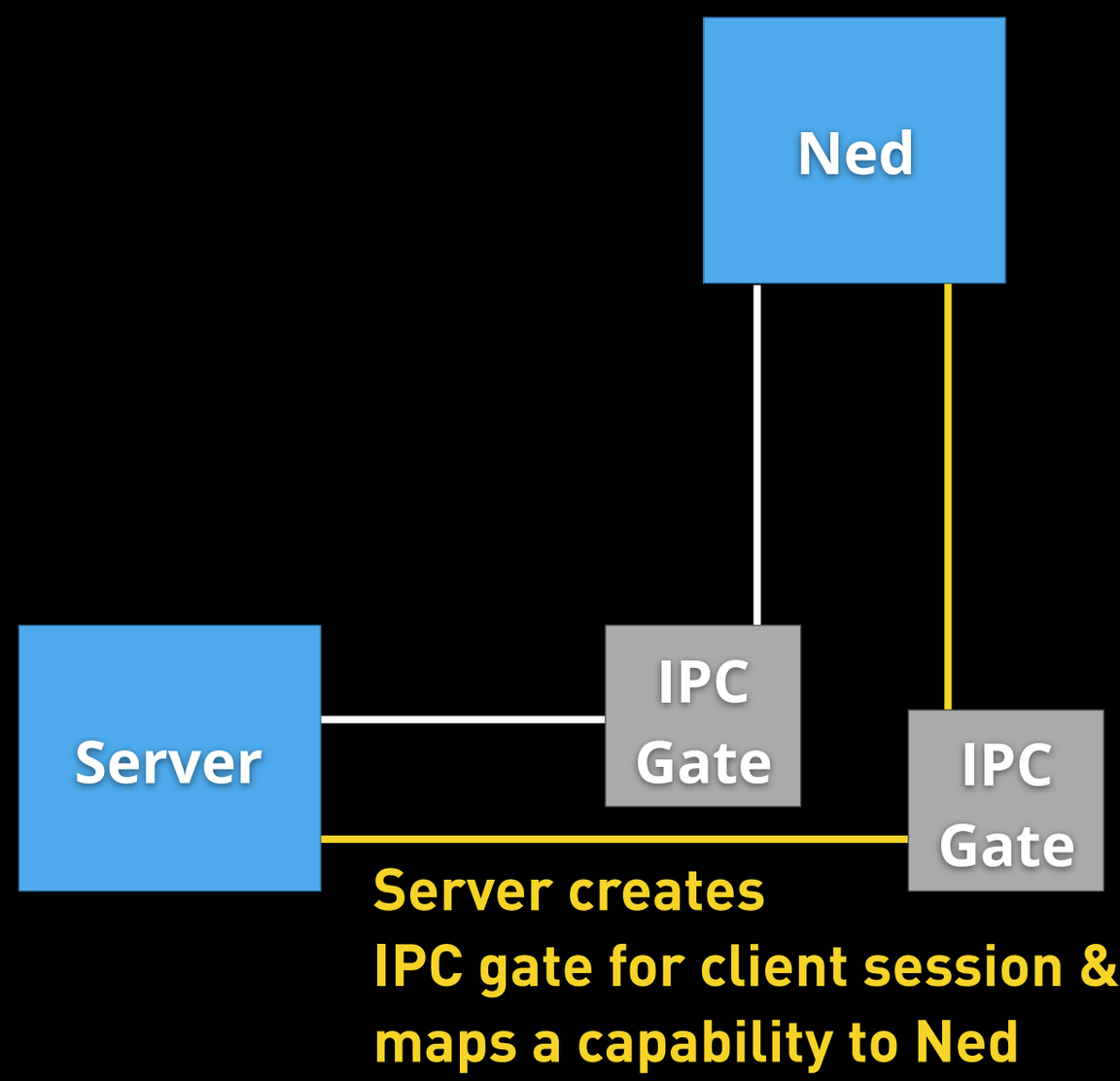

Sessions in L4Re

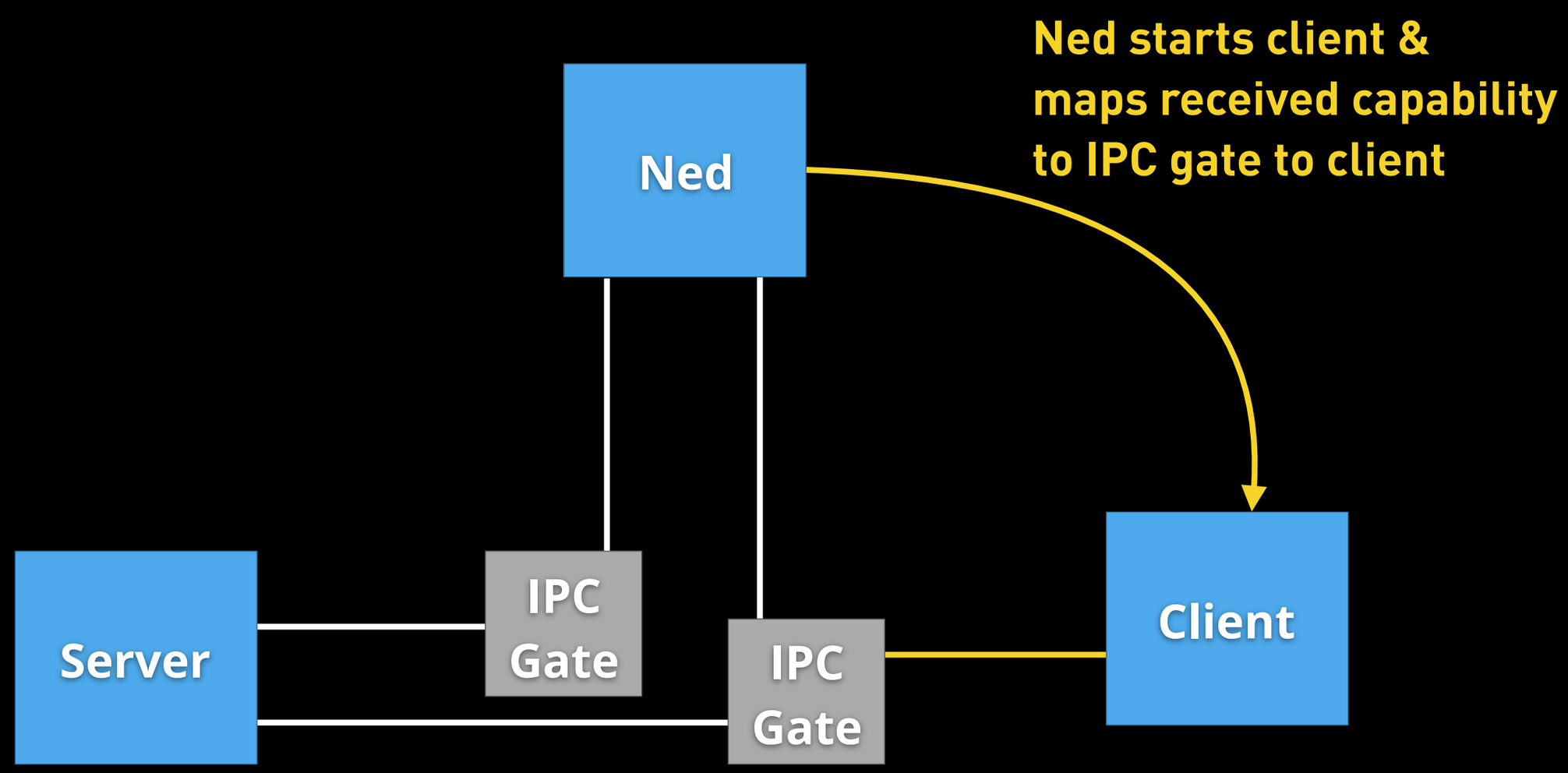

Sessions in L4Re

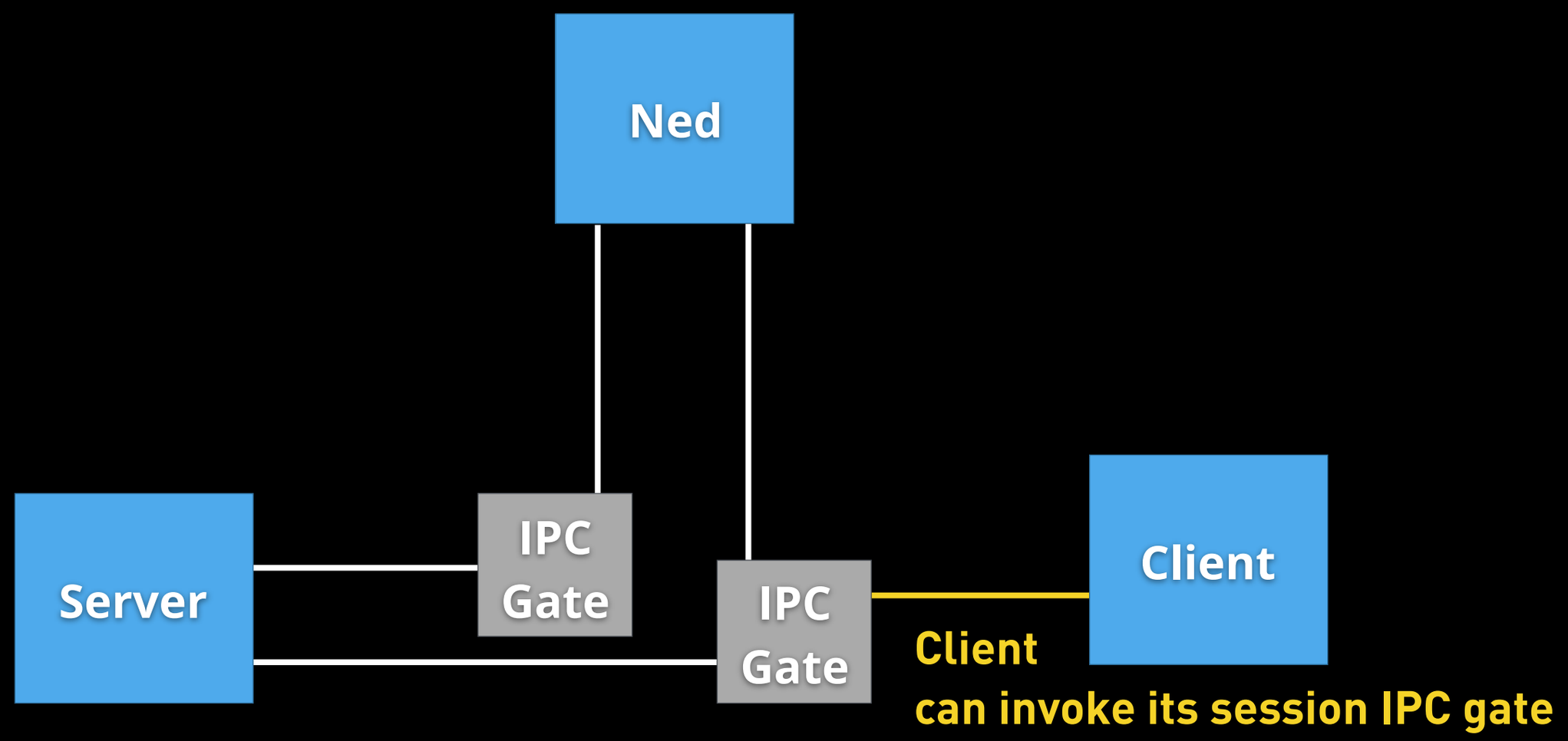

Lua Startup Script for Simple Server

```
local L4 = require(„L4");

local loader = L4.default_loader;
local hello2 = loader:new_channel();

L4.default_loader:start(
    { caps = { my_server = hello2:svr() },
      log = { "server", "red" } },
    "rom/hello2");

L4.default_loader:start(
    { caps = { my_server = hello2 },
      log = { "client1", "green" } },
    "rom/hello2_test");
```

Lua Startup Script for Session Server

```
local L4 = require(„L4");

local loader = L4.default_loader;
local hello2 = loader:new_channel();

L4.default_loader:start(
    { caps = { my_server = hello2:svr() },
      log = { "server", "red" } },
    "rom/hello2");

L4.default_loader:start(
    { caps = { my_server = hello2:create(0, "client1") },
      log = { "client1", "green" } },
    "rom/hello2_test");

L4.default_loader:start(
    { caps = { my_server = hello2:create(0, "client2") },
      log = { "client2", "blue"  } },
    "rom/hello2_test");
```

How to Implement Sessions

- Client don’t need to be changed (that’s what we wanted)
- Servers need to handle create call
- Before we look at that …
- … a short tour the L4Re IPC server framework

L4Re IPC Server Framework

- L4::Server implements basic server loop:

```
void loop() {
    while (true) {
        m = recv_message();
        ret = dispatch(m, utcb);
        send_reply(m, ret);
    }
}
```

- For each IPC gate there is a L4::Epiface, which
  - Keeps the capability to the IPC gate
  - Handles messages from its IPC gate via its dispatch() method
- How does the server know which L4::Epiface to use?

L4::Epiface Registry

- L4 : : Epifaces are stored in a per-server registry
- The registry can find Epifaces by an ID (label of IPC gate)
- L4 : : Basic_registry: ID is pointer to object
- L4Re : : Util : : Object_registry provides a convenient interface:

```
L4::Cap<void> register_obj(L4::Epiface *o,
                           char const *service);

L4::Cap<void> register_obj(L4::Epiface *o);

bool unregister_obj(L4::Epiface *o);
```

Registry Server

- L4Re::Util::Registry_server is a L4::Server that maintains a L4Re::Util::Object_registry

```
static L4Re::Util::Registry_server<> server;

class MyServer : public L4::Epiface_t<MyServer, MyInterface>
{ ... };

// When you need a new session object
server.registry()->register_obj(new MyServer());
```

Factory Server

```
class Session_server : public L4::Epiface_t <Session_server,
                                             L4::Factory > {
public:
    int op_create(L4::Factory::Rights,
                  L4::Ipc::Cap<void>& res,
                  l4_mword_t type,
                  L4::Ipc::Varg_list<> &&args) {
        if (type != 0)
            return -L4_ENODEV;
        L4::Ipc::Varg tag = args.next();
        if (!tag.is_of<char const *>())
            return -L4_EINVAL;
        auto my_server =
            new My_server(tag.value<char const *>());
        server.registry()->register_obj(my_server);
        res = L4::Ipc::make_cap_rw(my_server->obj_cap());
        return L4_EOK;
    }
};
```

Assignment 2.2: Sessions

- With that you can add support for multiple clients in the hello server.
- Assignment 2.2:
  - Make your hello server a logging server that supports multiple clients
  - Client messages should be prefixed with an id string that is passed to the server in the create call
- Problem: Now you need dynamic memory, but malloc and free are missing
- Hence, there is also Assignment 2.1 ...

Assignment 2.1

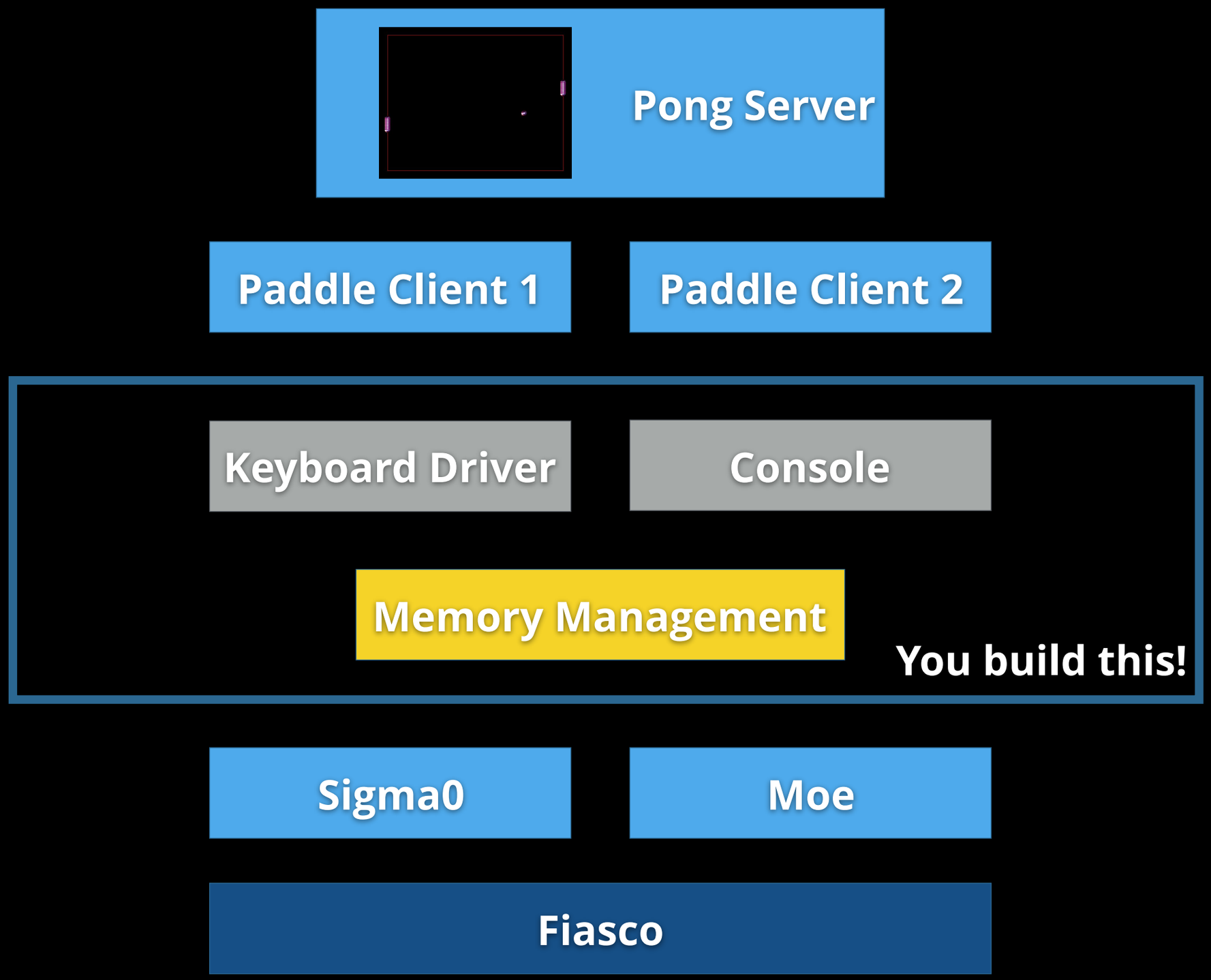

Memory Allocation

- Memory allocation is (currently not) implemented in a backend of L4Re's C library: src/l4/pkg/l4re-core/libc_backends/libs/l4re_mem
- You can get new pages from Moe:
  - Allocate a Dataspace capability
  - Get a Dataspace from Moe: L4Re::Env::env()->mem_alloc()->alloc(size , ds);
  - Attach dataspace to local address space: L4Re::Env::env()->rm()->attach(&addr, size , flags , ds);
- To free unused pages:
  - L4Re::Env::env()->rm()->detach(addr, nullptr); L4Re::Env::env()->mem_alloc()->free(ds);

How NOT to Allocate Memory

- What I don't want to see: Allocating a Dataspace for each an every call to malloc()

```
void *malloc(unsigned size) {
    L4::Cap<L4Re::Dataspace> ds =
        L4Re::Util::cap_alloc.alloc<L4Re::Dataspace>();
    if (!ds.is_valid())
        return 0;
    long err =
        L4Re::Env::env()->mem_alloc()->alloc(size, ds);
    if (err)
        return 0;
    void *addr = 0;
    err = L4Re::Env::env()->rm()->attach(&addr, size,
        L4Re::Rm::Search_addr , ds);
    if (err)
        return 0;
    return addr;
}
```

Expensive

Memory Management Done Right

- Idea:
  - Keep list of (address, size) pairs
  - In malloc, search for an appropriate entry
- Problem: You'd need dynamic memory for that list
- Typical Solution: Inlining
  - Put size and next-pointer directly into your memory
  - Do not hand out the memory where size is stored it's needed for free
  - That's what most libC-implementations do
- Or use a bitmap to store available chunks

Memory Management: Problems

- You will need some initial memory. You can use L4Re's memory allocator for that
- As soon as you have multiple threads (you will), you need proper locking
- There are more options for the implementation. Come up with something yourself, or have a look in some book or the internet

Assignment Summary

- Implement malloc(), free(), realloc(), calloc()
  - malloc() has to work first, but the other functions will be needed later on
  - Try not to waste too much memory
- Implement session support in your logging server:
  - It must support multiple clients
  - Have server print a string prefix that identifies the client who sent the message

- Next meeting: Let's see something!
  8 January 2019